Department of Health
and the Welsh Office

MC0018

Health Technical Memorandum

Building components

Sanitary assemblies 64

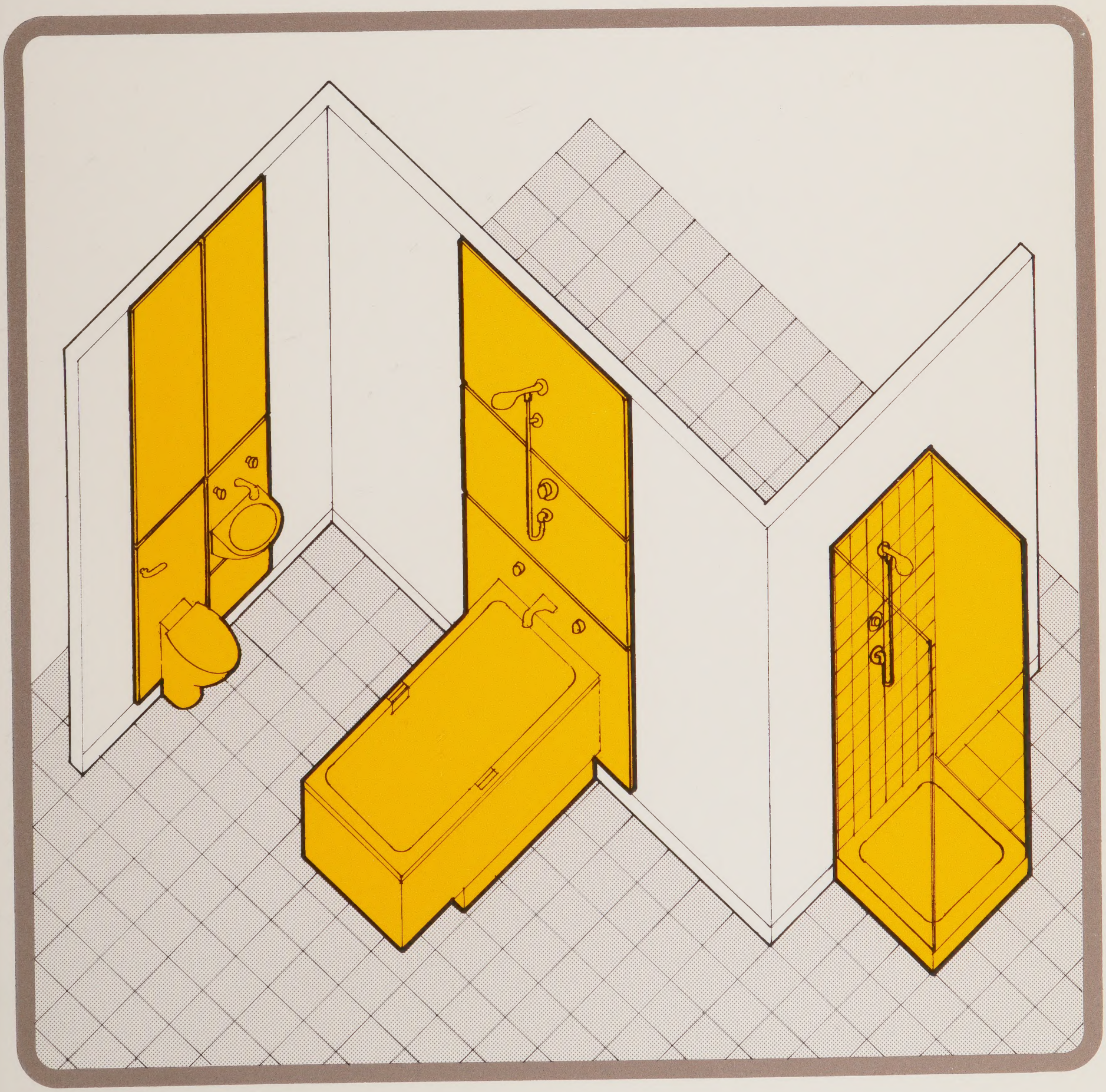

Department of Health
and the Welsh Office

Health Technical Memorandum

Building components

Sanitary assemblies 64

London:
Her Majesty's Stationery Office

©Crown copyright 1989
First published 1989
ISBN 0 11 321243 7

Contents

1 Introduction

1.1 Background

1.2 Scope and status

1.3 Relationship to other data

1.4 Terminology

2 Design and specification notes

2.1 User requirements

2.2 Soil assemblies

2.2.1 Relationship between appliances and fittings

2.2.2 Disposal units

2.2.3 Urinals

2.2.4 WCs

2.3 Waste appliances

2.3.1 Relationship between appliances and fittings

2.3.2 Basins

2.3.3 Baths

2.3.4 Bidets

2.3.5 Floor outlets

2.3.6 Plaster sinks

2.3.7 Scrub-up troughs

2.3.8 Showers

2.3.9 Sinks

2.3.10 Sink tops

2.3.11 Overflows

2.4 Supply fittings

2.4.1 Source of supply

2.4.2 Water conservation

2.4.3 Water treatment

2.4.4 Pipework

2.4.5 Water pressure

2.4.6 Water temperature

a) Manual control

b) Individual thermostatic control

c) Centralised thermostatic control

2.4.7 Water delivery
2.4.8 Positioning supply fittings
2.4.9 Backsiphonage
2.5 Waste fittings
2.6 Special requirements
2.7 Accessories
2.8 Cleaning and disinfection
2.9 Maintenance and replacement
2.10 Concealed services
2.11 Bacterial growth

3 Product selection criteria
3.1 Introduction
3.2 Component data sheets
3.3 Assembly data sheets

4 Project documentation
4.1 Scheduling
4.2 Product data
4.3 Bills of quantities

5 Site practice
5.1 Ordering and storage
5.2 Fixing and protection
5.3 Preparation for handover

References

1 Introduction

1.1 Background

This is one of a series of *Health Technical Memoranda* which provide specification and design guidance on building components for health buildings which are not adequately covered by current British Standards.

The series supersedes all Component Data Base Mk.3 (and earlier Manufacturers Data Base) information.

The numbers and titles of the HTM in the series are:

54 Building components and user manual
55 Windows
56 Partitions
57 Internal glazing
58 Internal doorsets
59 Ironmongery
60 Ceilings
61 Flooring
62 Demountable storage system
63 Fitted storage system
64 Sanitary assemblies
65 Signs
66 Cubicle curtain track
67 Laboratory fitting out systems
68 Duct and panel assemblies
69 Protection
70 Fixings

research and development funded by the Department as part of collaborative working arrangements over a number of years between the Department, the NHS, and Industry through the medium of the Component Data Base.

Any enquiries regarding the technical content of this HTM should be directed to Health Building Directorate, Department of Health, Euston Tower, 286 Euston Road, London NW1 3DN.

1.2 Scope and status

This HTM contains guidance on the design, application and specification of sanitary assemblies in health buildings.

Its content does not diminish either manufacturer responsibility for fitness for purpose of products, or design team responsibility for selection and application of products to meet project requirements.

1.3 Relationship to other data

The main sources of data used in the preparation of this HTM are listed in the References section.

This HTM was prepared in April 1984 and revised in October 1988, and is based on data current at that date. Readers should ensure that they use the latest edition of all building legislation, British Standards, etc., and give first preference to products and services from sources which have been Registered under BSI Quality Assurance procedures, or other certificated scheme.

1.4 Terminology

Throughout this HTM the following definitions apply:

Soil appliance
An appliance for the reception and discharge of excretory matter.

Waste appliance
An appliance for the reception of water for ablutionary, cleansing, or culinary purposes and its discharge after use.

Supply fitting
A fitting to control or regulate the supply of water, commonly used with an appliance.

Waste fitting
A fitting to conduct the discharge from an appliance and to connect to pipework.

Sanitary assembly
An assembly comprising a soil or waste appliance and appropriate supply and waste fittings.

Hospital pattern
For use by patients, and by medical and nursing staff in connection with medical and nursing procedures.

General pattern
For use by hospital staff and the public in general, ie non-medical/nursing, areas; or for use in residential accommodation.

Handing
Handing of an appliance is determined from the front of the appliance:

Right hand flushing lever

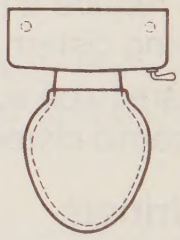

Right hand tap hole

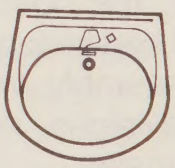

Right hand bath

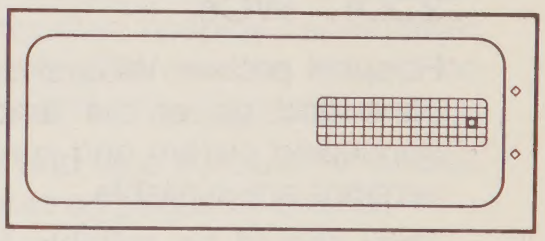

Right hand drainer

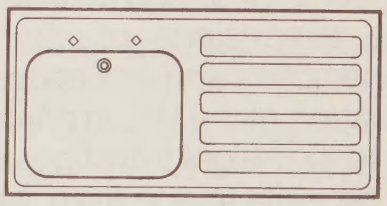

2 Design and specification notes

2.1 User requirements

The design team should refer to the Activity Data Base for user requirements for sanitary assemblies and should identify the appropriate components from the data sheets in section 3 of this HTM.

2.2 Soil assemblies

2.2.1 Relationship between appliances and fittings

The relationship between soil appliances and fittings which make up the complete assembly is critical. Therefore, disposal units, urinals and WCs must be treated as assemblies for the purposes of design, specification, procurement and installation.

2.2.2 Disposal units

A hospital pattern disposal unit should be provided in medical/nursing areas for disposal of solid and liquid waste, small dressings, and the contents of vomit bowls, drainage bags and urine bottles. The unit can also act as a standby in the event of the failure of a bed pan disposal unit (macerator) (see page 50).

A general disposal unit should be provided in other areas for disposal of liquid and solid waste.

Both units require a soil connection to the drain and a flushing cistern.

If services are to be surface mounted an exposed pattern ceramic cistern should be specified.

2.2.3 Urinals

Bowl urinals are more hygienic and easier to install than slabs.

Assemblies of 1, 2 and 3 bowls are available in two forms, the hospital pattern assembly with concealed services and cistern, and the general pattern assembly with exposed services and cistern. Divisions are available for use with multiple urinals.

2.2.4 WCs

Hospital pattern WCs should have wash down pans and be of the 'back-to-wall' type with concealed cistern and services. Adult and child versions are available.

They should be suitable for use with sanitary/wheel chairs, and this will involve co-ordinating the dimensions of chairs with those of WC assemblies and any necessary adjustment to the location of the WC in relation to the wall behind it, or to the height from floor level to facilitate transfer of patients to and from the chair.

For further information refer to:
HBN Common Activity Spaces and
BS 4751 Sanitary wheel chairs

General pattern WCs have low level exposed cisterns and may have wash down or double trap siphonic pans, the latter being more expensive but quieter in use.

All pans should have a horizontal or P-outlet so that the soil pipe can be connected above floor level. This gives flexibility in setting out pans and pipework and allows access to the joint for both installation and maintenance. A variety of WC connectors are available which can accommodate different configurations between the outlet and the soil pipe (see BS 5627 for WC connectors).

In the case of back-to-wall type pans suitable access must be provided to allow the fitting of the WC connector to be carried out properly. This can be provided either from the rear within a duct, or by access panels on the room side.

Overflow warning pipes should be provided and located where the discharge will be apparent to users.

2.3 Waste appliances

2.3.1 Relationship between appliances and fittings

Waste appliances may be dealt with as separate items as the relationship between the appliance and its fittings is less critical than for soil assemblies.

However, certain combinations of appliances and supply fittings are recommended and are illustrated on assembly data sheets on pages 52 to 62.

2.3.2 Basins

Basins should have a smooth form and easily cleaned surfaces. Overflows are not provided as they are unhygienic.

Three sizes of basin will fulfill most of the user requirements in health buildings:

- Large basins:
for use in medical/nursing areas for 'scrub-up' purposes, and for use by seated or wheelchair patients, for which wide shallow basins should be selected.
- Medium basin without tap holes:
for use in medical/nursing areas where wall mounted taps and ducted services are required.
- Medium basins with single and double tap holes for use in general areas.

- Small basins:

for use in WC cubicles, food preparation areas and similar locations. Suitable only for hand rinsing.

The design team should select the appropriate combinations of basins and taps illustrated on the assembly data sheets for:

- medical/nursing procedures (page 52)
- personal washing (page 53)
- seated users (page 54)
- hand rinsing (page 55)

2.3.3 Baths

Hospital pattern baths have near vertical sides and flat bottoms to contain a generous volume of water. They have no tap holes and should be used with wall mounted taps. Panels and plinths should be detailed as builders work.

Baths for assisted bathing should be installed to allow access from both sides and at one end by a mechanical hoist. In such situations baths may be subject to impact damage and suitably robust material should therefore be specified.

A recommended assembly of an assisted bath is illustrated on page 56.

A bath assembly for use by patients and/or staff personal bathing is shown on page 57.

Mechanically operated variable height baths can be used to permit either assisted or personal bathing.

2.3.4 Bidets

Bidets are generally used by patients in medical/nursing areas. The appliance should be rimless without plug or tap holes. A wall mounted hand spray should be provided mounted centrally and the water supply must be controlled by a thermostatic mixer valve to prevent scalding.

Spacers are available to increase the projection of bidets from the wall face behind to make them suitable for hospital use, and the appropriate means of preventing back siphonage must be provided.

A bidet assembly is illustrated on page 58.

2.3.5 Floor outlets

The general pattern floor outlet consists of a drainage outlet and grating with wall mounted taps and a flexible hose. It is used for the disposal of the contents of floor washing machines etc.

The hospital pattern floor outlet consists of a drainage outlet covered by a small grating. It is intended mainly for use in showers in medical/nursing areas. The floor should be dressed into the flange of the grating.

2.3.6 Plaster sinks

Plaster sinks in medical/nursing areas have a lift out strainer basket and wall mounted taps.

A plaster sink assembly is illustrated on page 59.

2.3.7 Scrub-up troughs

Scrub-up troughs should be provided to enable one or more surgeons and nurses to scrub their hands and forearms

Troughs should be wall hung and fitted with a single waste outlet. Taps should be wall mounted.

A scrub-up trough assembly is illustrated on page 60.

2.3.8 Showers

Showers in medical/nursing areas should be provided in shower rooms with wheelchair access. The floor should be laid to falls to a waste outlet set into the floor. Supply fittings should be wall mounted.

Flexible connections to hand held shower heads should be provided and the design of the unit should be such that the head cannot become immersed in water.

Shower controls should be positioned so as to allow manipulation without the operator getting wet.

Showers in medical/nursing areas should be thermostatically controlled with a fail-safe mechanism to prevent scalding should the cold water supply fail.

Showers in general areas for use by staff should be provided by shower trays with wall mounted supply fittings.

Where filters are provided the recommended maintenance procedures should be followed.

2.3.9 Sinks

A stainless steel sink bowl with wall mounted taps should be provided as a cleaners sink in general areas. Overflows should not be provided.

2.3.10 Sink tops

A range of stainless steel sinks with integral drainers are available for general use. They are provided with tap holes for use with exposed supply pipes below the sink or without tap holes for use with wall mounted taps. Overflows should not be provided. Wall mounted hospital pattern lever action taps with concealed services should be provided with sinks used for nursing procedures.

Assemblies of sinks and taps suitable for various situations are illustrated on pages 61 and 62.

2.3.11 Overflows

Overflows are not generally specified as they are unhygienic. Where appliances are situated in buildings where 24 hour occupation does not take place, then consideration should be given to the use of standing wastes.

2.4 Supply fittings

2.4.1 Source of supply

All installations must comply with the statutory regulations framed to avoid the risk of contamination of the mains water supply. The principal requirement is to ensure that no sanitary assembly in a health building is connected directly to the mains water supply. Residential buildings can be an exception to the regulations where the kitchen sink may be connected directly to the main.

For further information see HTM27: Cold water supply, storage and mains distribution.

2.4.2 Water conservation

The need to conserve water should always be considered when selecting sanitary assemblies and supply fittings.

Considerable savings of both hot and cold water can be made by specifying showers rather than baths and spray taps for hand rinsing.

2.4.3 Water treatment

Water softening treatment should be provided and maintained regularly in hard water areas.

2.4.4 Pipework

Pipework should be planned to avoid dead legs which are wasteful of heat and can cause corrosion of pipes and fittings by allowing sediment to be deposited.

Stop valves should be provided to isolate each individual appliance.

Pipe clips on exposed pipework should be specified and installed to avoid injury to staff and patients from sharp edges or the like.

2.4.5 Water pressure

Water pressure should be controlled by pressure reducing valves in high pressure areas as part of the engineering services installation. This should improve the performance of sanitary assemblies and avoid the use of expensive supply fittings.

2.4.6 Water temperature

The water temperature at point of delivery should be controlled by one of the methods described below as appropriate to user requirements:

a) Manual control

Separate hot and cold water taps or valves controlled manually by the user.

b) Individual thermostatic control

Thermostatic mixing of hot and cold water by a valve at a fitting. The maximum water temperature required may be set and locked on the valve.

c) Centralised thermostatic control

A thermostatic control valve may be fitted as part of the engineering services installation to limit the temperature at which heated water is distributed. Valves may be sited to cover the supply to a department or to a range of fittings. This form of installation allows the use of on/off manual control at the appliance served.

To reduce the risk of an outbreak of Legionnaires disease occurring cold water should be stored and distributed at a temperature below 20°C and hot water should be stored at a temperature of 60°C and distribution controlled at a temperature of 52°C (±2°C control tolerance).

The safety of some children and elderly people can be compromised if they are allowed unsupervised use of bathing facilities supplied with water at this temperature. This risk can be reduced by the installation at each bath and shower outlet of locally adjustable thermostatic mixing valves, preset and locked to provide a blended water temperature not exceeding 43°C. These mixing valves should be of a type unaffected by changes in water pressure and should fail safe i.e. automatically close the hot water supply if the cold water supply fails. Vigilance will still be required to ensure that vulnerable patients using wash basins or sinks are not in prolonged contact with water at a temperature which could be marginally in excess of 52°C.

2.4.7 Water delivery

Water may be supplied via a fixed, swivelling or flexible outlet. The final discharge may be through a plain or aerated nozzle or a spray.

Water authority regulations stipulate that no supply fitting shall mix hot water with cold water supplied direct from the main. In combination fittings this is prevented by the use of divided flow outlets. Of these the annular flow outlet is preferred to avoid risk of scalding.

Taps or valves which control the rate of water delivery may have a cross head or moulded top, a lever, toggle, press down shroud or remote mechanism for operation by foot or knee.

The supply fittings shown on the data sheets should fulfil most health service needs. Elaborate devices such as electronic transmitters, and light sensitive cells for specialised applications are available, but have not been included in this HTM.

2.4.8 Positioning supply fittings

In all surgical areas and, where practical, in medical/nursing areas supply fittings should be fixed on the wall or on a backing panel to facilitate installation, cleaning and maintenance of the appliance.

2.4.9 Backsiphonage

Water bye-laws require that supply fittings on baths, basins and sinks etc. shall be arranged so that discharge takes place at least 25mm above the spill-over level of the appliance.

When flexible pipes with hand-held spray attachments are used with these fittings, special measures must be taken to prevent backsiphonage.

A number of solutions are available including the use of break tanks.

2.5 Waste fittings

The waste fittings included in this HTM are outlets and traps. They have been illustrated and specified separately as individual components on the component data sheets (see 3.2) so that the appropriate fitting for the appliance can be selected. In some instances they are specified on the appliance data sheet and on the assembly sheets.

All outlets are unslotted for use with appliances without overflows. There are two types, one with a flush grating and the other with a recessed grating, plug, chain and stay. Plugs are only required where it is necessary to retain water in an appliance ie basins for general use, baths and sinks. Where this is not required plugs should be omitted and the flush grating type used.

Bottle traps for use with waste appliances can be either metal or plastic, with a CP finish where exposed or self finished where concealed. Resealing traps should be used generally and always with single stack plumbing.

2.6 Special requirements

This HTM does not cover special requirements such as Asian WCs, variable height baths, autopsy tables and drinking fountains. These should be selected directly from manufacturers product literature.

2.7 Accessories

Accessories such as toilet roll holders, grab rails, mirrors, soap dispensers and towel rails are not included in this HTM and should be specified directly from manufacturers product literature.

2.8 Cleaning and disinfection

Components should be easy to clean. There should be no inaccessible recesses, rough surfaces or projections, sharp edges etc which may retain dirt, snag cleaners' hands or equipment, or be difficult to reach.

Hospital cleaning policies should ensure that care is exercised in cleaning sanitary assemblies, particularly those that are new. Approved cleaning cloths, neutral detergent solutions and cream cleansers only should be used to avoid damaging surfaces. Materials such as scouring powders and abrasive pastes and pads can cause irreparable damage and must be avoided. Abrasive scouring powders can cause considerable damage by removing glaze.

A descaling fluid should be used to remove lime deposits in WCs and other appliances.

The Control of Infection authority should be consulted and their recommendations strictly applied where it is necessary to disinfect baths and other appliances.

Components should be sealed at junction with floor and walls with a suitable sealant.

Splash backs may be of ceramic tiles, plastic laminate sheet or protective coatings.

2.9 Maintenance and replacement

Planned maintenance of sanitary assemblies should be included in maintenance manuals and programmes to ensure that supply and waste fittings are in full working order.

Some components such as tap and valve washers, flexible hoses and plugs and chains become worn with use. They should be examined regularly and replaced before they affect the operation of the entire assembly.

2.10 Concealed services

In medical/nursing areas pipework and cisterns should always be concealed. This is desirable generally wherever it is practicable.

Exposed services are visually unattractive, can be unhygienic, and are difficult to clean and decorate. Indeed the additional cost of the latter over a number of years may well exceed any savings in initial capital costs.

Adequate access should always be provided to ducted services to maintain pipework joints, traps and cisterns and to operate valves.

Where a range of appliances is duct mounted and can be planned with walk-in access, the duct should have a clear internal width of 600mm.

Fixings for duct panels should be chosen to suit the expected frequency of access. Screwed fastenings should only be used where unavoidable. Hinged or lift-off panels are to be preferred.

Duct panels will be acting as splashbacks; plastic laminated faced boards (with balancing veneer) with lipped or post-formed edges have been found to be suitable. In some situations they may need to be fire resistant.

In all cases the objectives of design and specification should be an installation which is neat, easy to clean and maintain and durable.

2.11 Bacterial growth

Components and accessories should not sustain the growth of bacteria. Lists of suitable applications may be obtained from water authorities and manufacturers.

3 Product selection criteria

3.1 Introduction

The component data sheets and assembly data sheets in this section provide the design teams with a set of product selection criteria in graphic and text form for each of the soil and waste appliances and assemblies covered by the guidance in section 2, and are intended for use in evaluating manufacturers' trade literature, and communicating requirements to manufacturers and to merchants.

The component references on the component data sheets may be used by the design team to identify each appliance when preparing layout drawings, schedules and product lists (see 4.1).

The references are made up in sequence of:

- appliance/fitting
- type
- material (where applicable)

soil appliances

DU	disposal unit
UR	urinal
WC	water closet

waste appliances

LB	lavatory basin
BA	bath
BD	bidet
FO	floor outlet
PS	plaster sink
SU	scrub-up
SH	shower
SK	sink
ST	sink top

supply fittings

TP	pillar tap
TB	bib tap
MM	manual mixer shower
TM	thermostatic mixer shower

waste fittings

WT	waste

traps

TR	trap
TRR	trap resealing

type

H	hospital pattern
G	general pattern
A	adult
C	child
L	low level
C	close coupled
S	siphonic

material

M	metal
P	plastic
C	ceramic

3.2 Component Data Sheets

Component Reference	Soil Appliances	Page Number
DU H	Hospital Pattern Disposal Unit	8
DU H S	Hospital Pattern Disposal Unit with Sink	9
DU G	Domestic Services Unit	10
UR H/1	Hospital Pattern Urinals - Single/Double/Triple Bowl(s)	11
2		11
3		11
UR G/1	Urinals - Single/Double/Triple Bowl(s)	12
2		12
3		12
WC H/A	Hospital Pattern WC - Adult pattern	13
WC H/C	Hospital Pattern WC - Child pattern	13
WC G/L	Low Level Wash-down WC	14
WC G/C	Close Coupled Wash-down WC	15
WC G/S	Siphonic WC	16
	Waste Appliances	
LB H/S	Hospital Pattern Basin - Small/Medium/Large	17
M		17
L		17
LB G/S	General Basin - Small/Medium/Large	18
M		18
L		18
BA H/M	Hospital Pattern Metal Bath	19
BA H/P	Hospital Pattern Plastics Bath	20
BA G	General Bath	21
BD H	Hospital Pattern Bidet	22
FO H	Hospital Pattern Floor Outlet	23
FO G	Floor Outlet	24
PS H	Hospital Pattern Plaster Sink	25
SU H/1	Hospital Pattern Scrub-up Trough	26
2		26
3		26
SH G/P	Plastics Shower Receiver	27
SH G/C	Ceramic Shower Receiver	28
SK/1	Sink - Single Bowl	29
SK/2	Sink - Double Bowl	30
ST/A	Sink Tops - Single Bowl Single Drainer	31
B	Single Bowl and Double Drainer	31
C	Double Bowl and Single Drainer	31

Component Reference	Supply Fittings	Page Number
TP1	½in (12 mm) Pillar Tap	32
TP2	¾in (18 mm) Pillar Tap	32
TP3	½in (12 mm) Pillar Tap High Neck	33
TP4	½in (12 mm) Pillar Tap Toggle Action	33
TP5	½in (12 mm) Pillar Tap Short Lever Action	34
TP6	Pillar Mixer Tap with Spray	34
TP7	Pillar Combination Tap Assembly (Swivel Nozzle)	35
TB1	½in (12 mm) Bib Tap with Hose Union	35
TB2	½in (12 mm) Bib Tap with Hose Union	36
TB3	½in (12 mm) Bib Tap	36
TB4	Bib Combination Tap Assembly (Swivel Nozzle)	37
TB5	Bib Combination Tap Assembly	37
TB6	Bib Combination Tap Assembly	38
TB7	Wall Mounted Manual Mixer Spray	38
TB H1	½in (12 mm) Hospital Pattern Bib Tap	39
TB H2	Hospital Pattern Bib Combination Tap Assembly (Swivel Nozzle)	39
TB H3	Hospital Pattern Bib Combination Tap Assembly (Fixed Nozzle)	40
TB H4	Hospital Pattern Bib Thermostatic Mixer	40
TB H5	Hospital Pattern Bib Manual Mixer	41
MM1	Wall Mounted Manual Mixer Shower (with Handset)	41
MM2	Wall Mounted Manual Mixer Shower (Fixed Nozzle)	42
TM1	Wall Mounted Thermostatic Mixer Shower (with Handset)	42

Component Reference	Waste Fittings	Page Number
WT1	1¼in (32 mm) Flush Grated Waste	43
WT2	1½in (38 mm) Flush Grated Waste	43
WT3	1¼in (32 mm) Waste with Plug and Chain	44
WT4	1½in (38 mm) Waste with Plug and Chain	44
	Traps	
TR1/M	1¼in (32 mm) Bottle Trap – Metal	45
TR2/M	1½in (38 mm) Bottle Trap – Metal	45
TR R1/M	1¼in (32 mm) Resealing Bottle Trap – Metal	46
TR R2/M	1½in (38 mm) Resealing Bottle Trap – Metal	46
TR 1/P	1¼in (32 mm) Bottle Trap – Plastic	47
TR 2/P	1½in (38 mm) Bottle Trap – Plastic	47
TR R1/P	1¼in (32 mm) Resealing Bottle Trap – Plastic	48
TR R2/P	1½in (38 mm) Resealing Bottle Trap – Plastic	48

DU H Hospital Pattern Disposal Unit

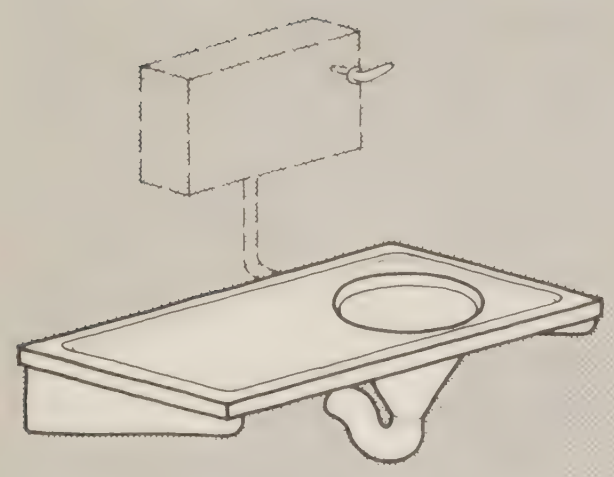

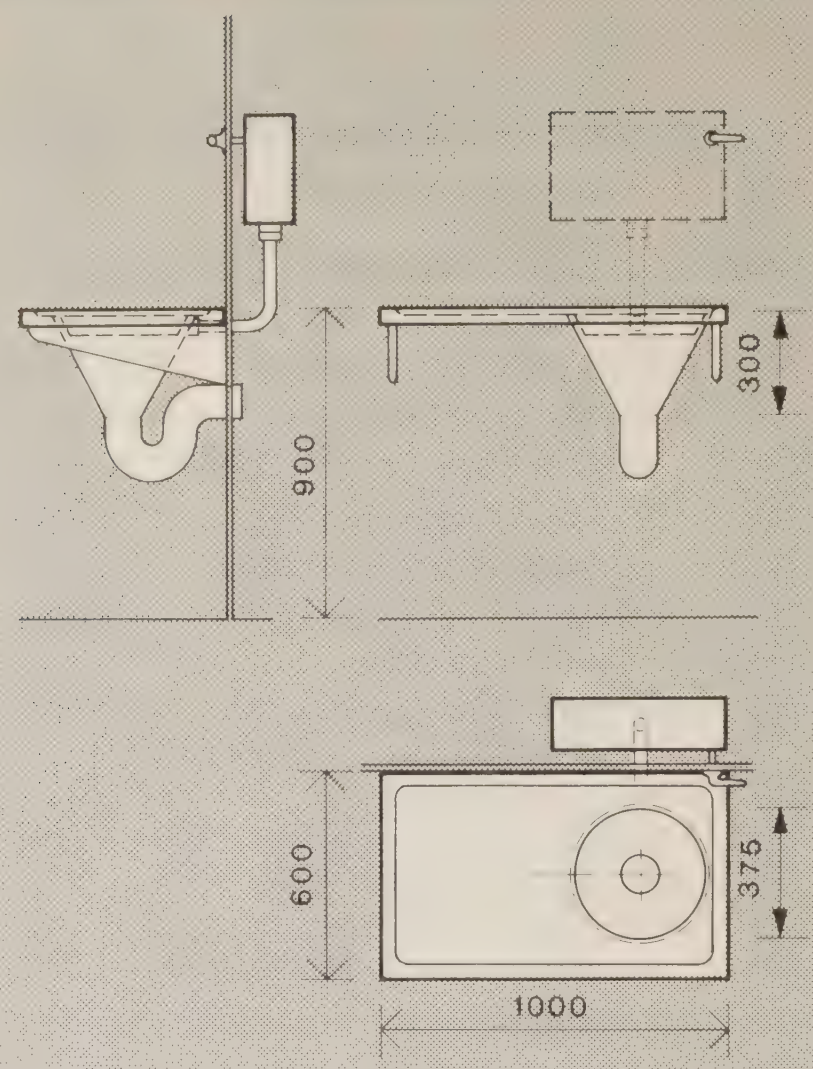

Identification

A stainless steel plain top incorporating a hopper.
Left hand unit (illustrated).

Standards

Stainless steel type 304 SI6:-	BS 1449:Part 2
Copper tube:-	BS 2871:Part 1
Flushing cistern:-	BS 1125
Float operated valves:	
Diaphragm type:-	BS 1212
Floats (plastics) for ball valves:-	BS 2456
Stainless steel tube:-	BS 3605

Description

A plain top of stainless steel (min. 16 swg or where press formed 18 swg) with no tapholes, no upstand, edges rimmed and turned down, underside sound deadened with smooth impermeable easily cleaned material and/or underlined with stainless steel.
The top incorporates a hopper with continuous flushing rim and concealed connection and 'p' trap with 100/110 mm outgo.
A single flush reversible plastics cistern (for mounting in duct) with ½ in LP brass valve, plastics float, and metal flush pipe, and CP metal flushing lever handle.
Stainless steel wall mounting brackets.
All exposed stainless steel finished No. 3B; outside of hopper finished bead blast.
Earthing terminal.

Options

Right hand unit.
Stainless steel support frame in lieu of wall brackets.
½ in HP brass valve.
Exposed cistern and pipework.
Plastics flush pipe.

Application

For disposal of liquid and solid waste. For use with concealed services: use with wall mounted supply fittings.

Fixing/Installation

Disposal unit mounted on brackets and/or fixings suitable for screw fixing to wall or duct panel.
Provision for screw fixing concealed cistern and pipework.

- Make provision for discharge of overflow warning pipe.
- Should only be fed from tanked supply.
- Use HP valve option when connecting to water supply pressure in excess of 1.35 bar.

Cleaning/Maintenance

Exposed surfaces smooth and easily cleaned, no sharp edges.

Front edge profiles may be square as shown or with roll front edge (and with upstand at rear) to suit profile shown in HTM62 and 63. Depth will then be 650.

DU H S Hospital Pattern Disposal Unit with Sink

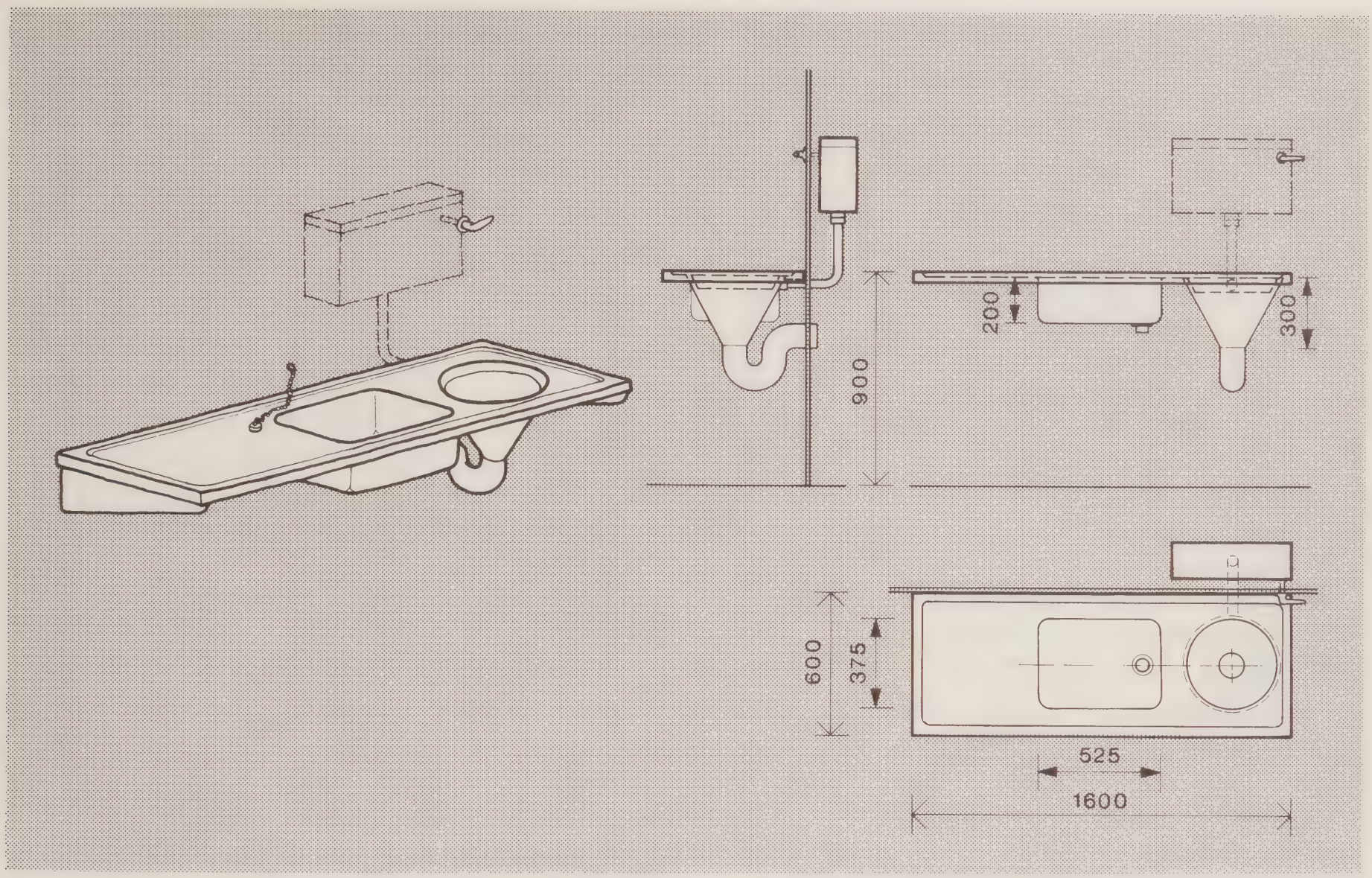

Identification

A stainless steel plain top incorporating a sink and a hopper. Left hand unit (illustrated).

Standards

Stainless steel type 304 SI6:-	BS 1449:Part 2
Copper tube:-	BS 2871:Part 1
Flushing cistern:-	BS 1125
Float operated valves:	
Diaphragm type:-	BS 1212
Floats (plastics) for ball valves:-	BS 2456
Stainless steel tube:-	BS 3605

Description

A plain top of stainless steel (min. 16 swg or where press formed 18 swg) with no tapholes, no upstand, edges rimmed and turned down, underside sound deadened with smooth impermeable easily cleaned material and/or underlined with stainless steel.

The top incorporates a rectangular sink bowl without overflow and a hopper with continuous flushing rim and concealed connection and 'p' trap with 100/110 mm outgo.

A single flush reversible plastics cistern (for mounting in duct) with ½ in LP brass valve, plastics float, and metal flush pipe, and CP metal flushing lever handle.

1½ in. (38 mm) unslotted waste (CP on brass) with recessed grate, plug with metal link chain and screw stay.

Stainless steel wall mounting brackets.

All exposed stainless steel finished No. 3B; outside of sink and hopper finished bead blast.

Earthing terminal.

Options

Right hand unit.

Stainless steel support frame in lieu of wall brackets.

½ in HP brass valve.

Exposed cistern and pipework.

Plastics flush pipe.

Application

For disposal of liquid and solid waste. For use with concealed services: use with wall mounted supply fittings.

Fixing/Installation

Disposal unit mounted on brackets and/or fixings suitable for screw fixing to wall or duct panel. Provision for screw fixing concealed cistern and pipework.

- Make provision for discharge of overflow warning pipe.
- Should only be fed from tanked supply.
- Use HP valve option when connecting to water supply pressure in excess of 1.35 bar.

Cleaning/Maintenance

Exposed surfaces smooth and easily cleaned, no sharp edges.

Front edge profiles may be square as shown or with roll front edge (and with upstand at rear) to suit profile shown in HTM62 and 63. Depth will then be 650.

DU G Domestic Services Disposal Unit

Identification

A stainless steel hopper with hinged grid.

Standards

Stainless steel type 304 SI6:-	BS 1449:Part 2
Copper tube:-	BS 2871:Part 1
Flushing cistern:-	BS 1125
Float operated valves:	
Diaphragm type:-	BS 1212
Floats (plastics) for ball valves:-	BS 2456
Stainless steel tube:-	BS 3605

Description

A stainless steel (min. 16 swg) with no tapholes, no upstand, edges rimmed and turned down and with continuous flushing rim and concealed connection and 'P' trap with 100/110 mm outgo: polished brass flush grating to hopper.

A single flush reversible plastics cistern (for mounting in duct) with ½ in LP brass valve, plastics float, and metal flush pipe, and CP metal flushing lever handle.

Stainless steel hinged grid.

Stainless steel wall mounting brackets.

All exposed stainless steel finished No. 3B; outside of hopper finished bead blast.

Earthing terminal.

Options

Stainless steel support frame in lieu of wall brackets.

½ in HP brass valve.

Exposed cistern and pipework.

Plastics flush pipe.

Application

For disposal of liquid and solid waste. For use with concealed services: use with wall mounted supply fittings.

Fixing/Installation

Disposal unit mounted on brackets and/or fixings suitable for screw fixing to wall or duct panel.

Provision for screw fixing concealed cistern and pipework.

- Make provision for discharge of overflow warning pipe.
- Should only be fed from tanked supply.
- Use HP valve option when connecting to water supply pressure in excess of 1.35 bar.

Cleaning/Maintenance

Exposed surfaces smooth and easily cleaned, no sharp edges.

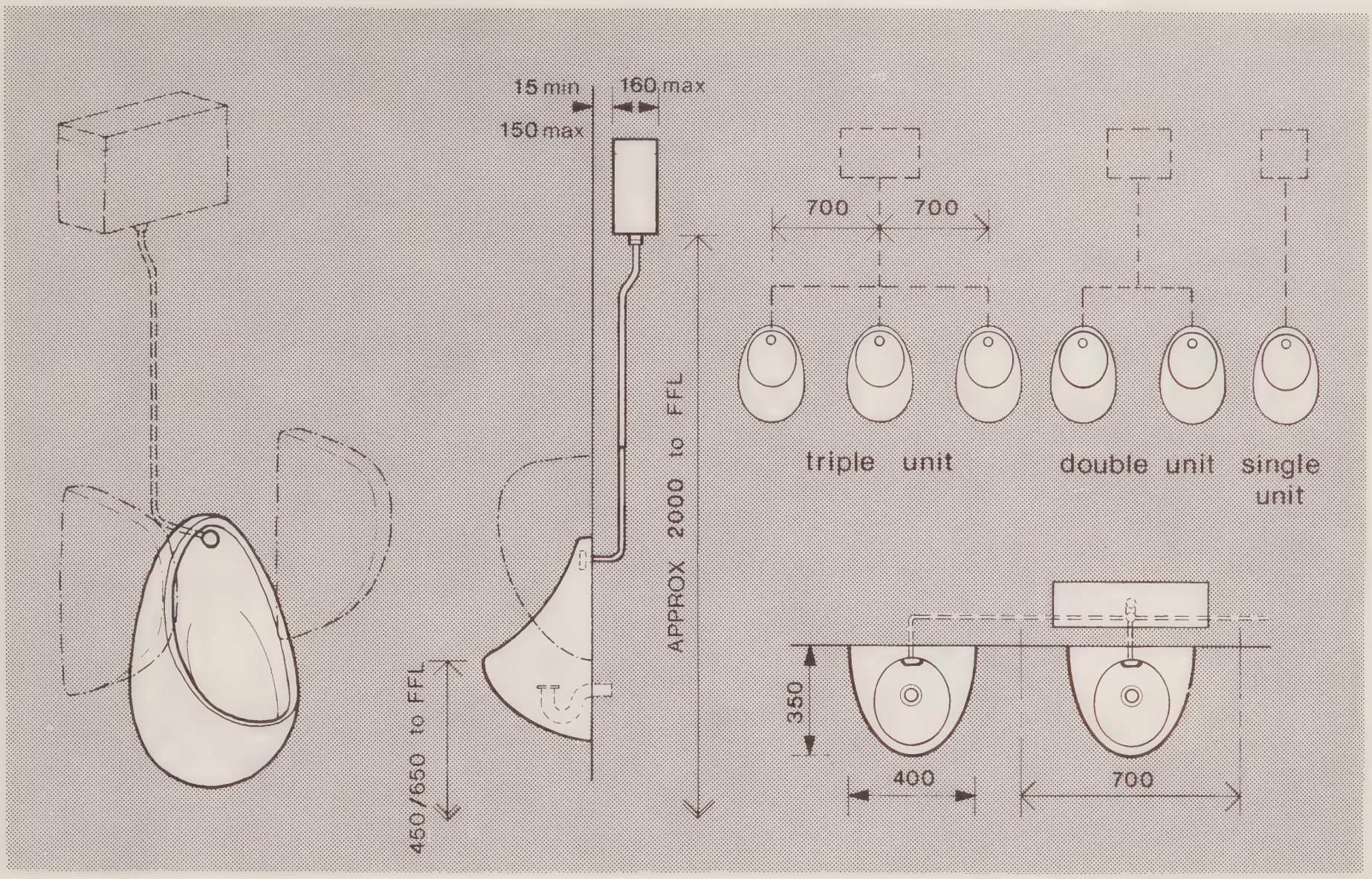

Identification

Wall mounted single, double or triple urinal with high level cistern and pipework for mounting in duct.

Standards

Vitreous china:-	BS 3402
Bowl urinals:-	BS 5520
Wastes:-	BS 3380:Part 1
Copper & copper alloy traps:-	BS 1184
Copper tube:	BS 2871:Part 1
Automatic flushing cistern:-	BS 1876

Description

White vitreous china bowl(s).
Plastics reversible cistern and cover with side supply.
12 mm pet cock and automatic siphon.
Metal flushing pipework and back inlet CP or stainless steel spreader.
1½ in. (38 mm) polished brass strainer waste outlet(s) and metal 'P' trap(s) with back outlet connection to concealed services.
All necessary fixing devices.

Options

Wall mounted screen panels.
Coloured glaze.
Plastics waste, trap and flush pipe.

Application

For use with concealed services.

Fixing/Installation

Concealed brackets and fixings for bowl (and screen panels).
Provision for screw fixing concealed cistern and pipework.

- Should only be fed from tanked supply.
- Cistern should not flush at intervals of less than twenty minutes (refer to local water bye-laws).

Cleaning/Maintenance

Exposed surfaces smooth and easily cleaned.

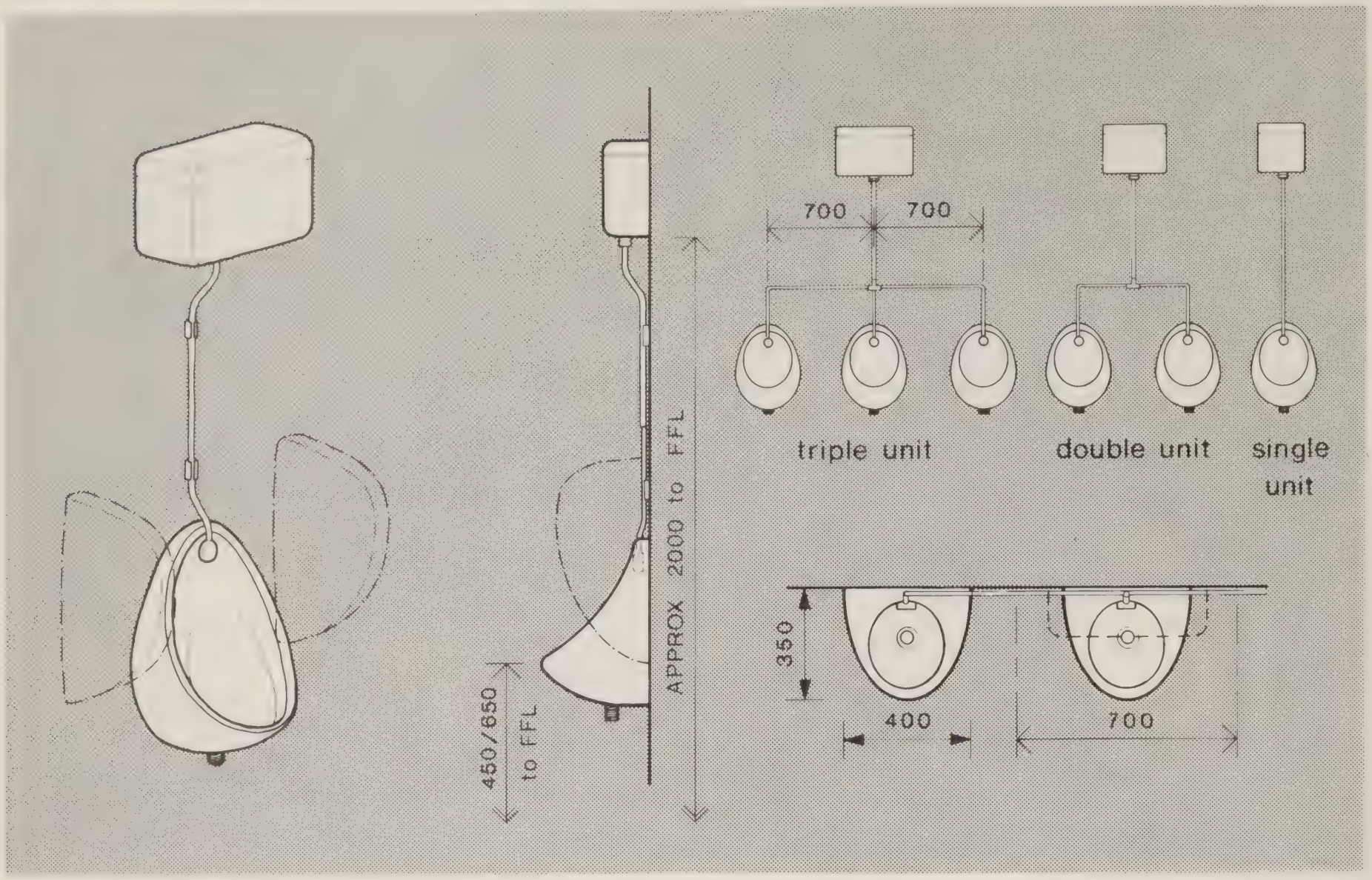

Identification

Wall mounted single, double or triple urinal with exposed high level cistern and pipework.

Standards

Vitreous china:-	BS 3402
Bowl urinals:-	BS 5520
Wastes:-	BS 3380:Part 1
Stainless steel tube:-	BS 3605
Copper tube:-	BS 2871:Part 1
Automatic flushing cistern:-	BS 1876

Description

White vitreous china bowl(s).
White vitreous china cistern with secured cover, side supply and short outlet tail.
12 mm pet cock and automatic siphon.
Metal CP or stainless steel flushing pipework and spreader with easily cleaned pipe clips.
1½ in. (38 mm) polished brass strainer waste outlet(s).
All necessary fixing devices.

Options

Wall mounted screen panels.
Coloured glaze.
Plastics waste, trap and flush pipe.

Application

For use with exposed services.

Fixing/Installation

Concealed brackets and fixings for bowl and cistern (and screen panels).
Provision for screw fixing pipework.

- Should only be fed from tanked supply.
- Cistern should not flush at intervals of less than twenty minutes (refer to local water bye-laws).

Cleaning/Maintenance

Exposed surfaces smooth and easily cleaned.
Pipe clips should be free from sharp edges and protrusions.

WC H/A Hospital Pattern WC — Adult Pattern
WC H/C — Child Pattern

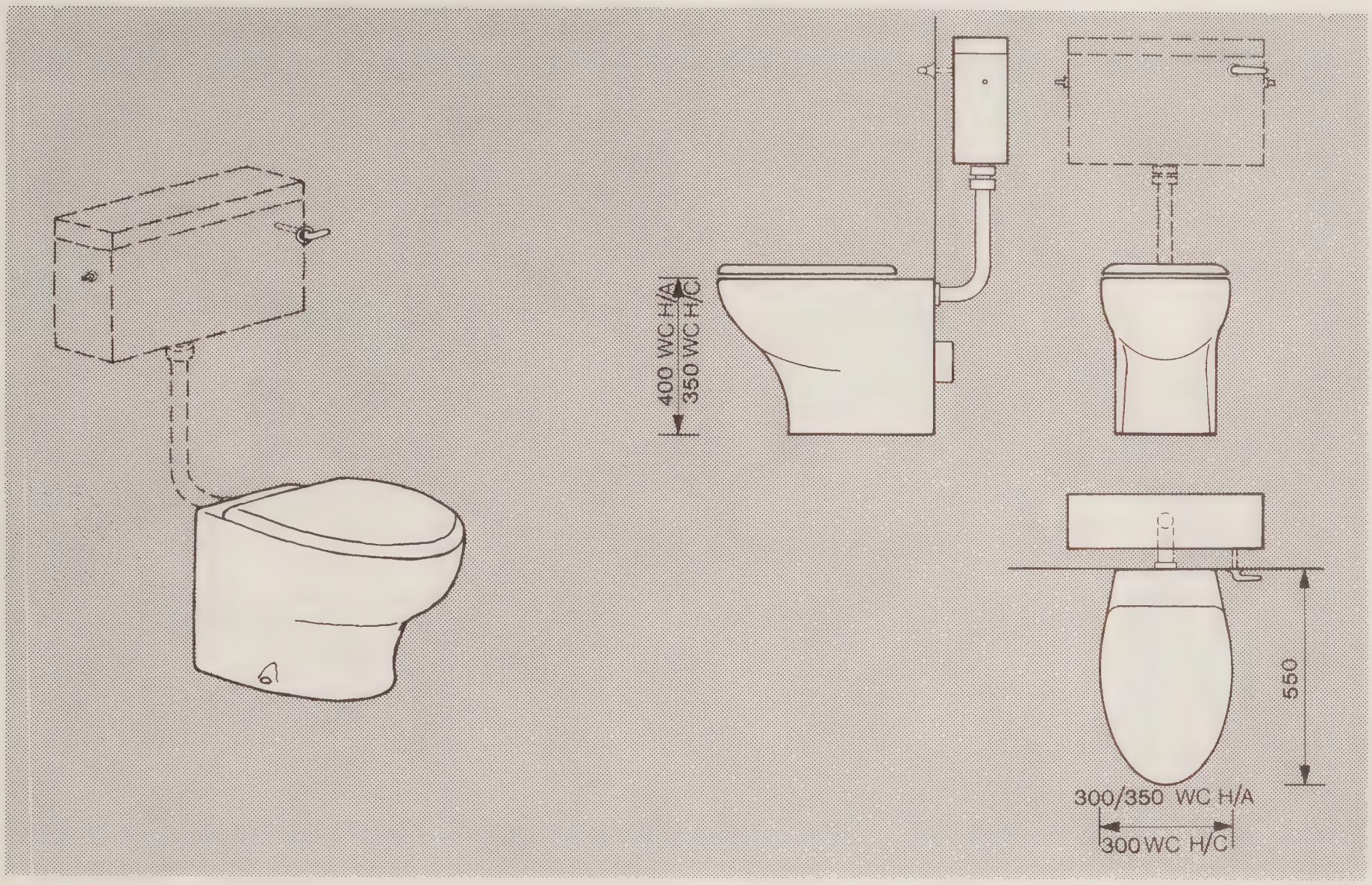

Identification

Low level wc with back-to-wall pan and cistern and pipework for mounting in duct.

Standards

Vitreous china:-	BS 3402
Washdown wc pans with horizontal outlet, generally as:-	BS 5503
WC flushing cisterns:-	BS 1125
Float operated valves:	
Diaphragm type:-	BS 1212
Floats (plastics) for ball valves:-	BS 2456
WC seats (plastics):-	BS 1254

Description

White vitreous china wash-down pan, suitable for use with sanitary chairs complying with BS4751, with rimless or perforated box rim and with 'P' trap.
Plastics reversible cistern with ½ in LP brass valve, plastics float and siphon, flushing pipework, CP metal flushing handle.
White plastics ring seat and cover, set on easy-clean metal hinges.
Any necessary fixing devices.

Options

Colour glaze
Coloured seat and cover
½ in HP brass valve
Extension piece, 200 deep, where used in disabled peoples accommodation

Application

Suitable for use with concealed services.

Fixing/Installation

Pan prepared for screw fixings to floor; use screws with domed covers.
Provision for screw fixing concealed cistern and pipework

- Make provision for discharge of overflow warning pipe.
- Should only be fed from tanked supply.
- Use HP valve option when connecting to water supply pressure in excess of 1.35 bar.

Cleaning/Maintenance

Exposed surfaces smooth and easily cleaned. Exposed surface of extension piece finished with melamine or similar material.

WC G/L Low Level Wash-Down WC

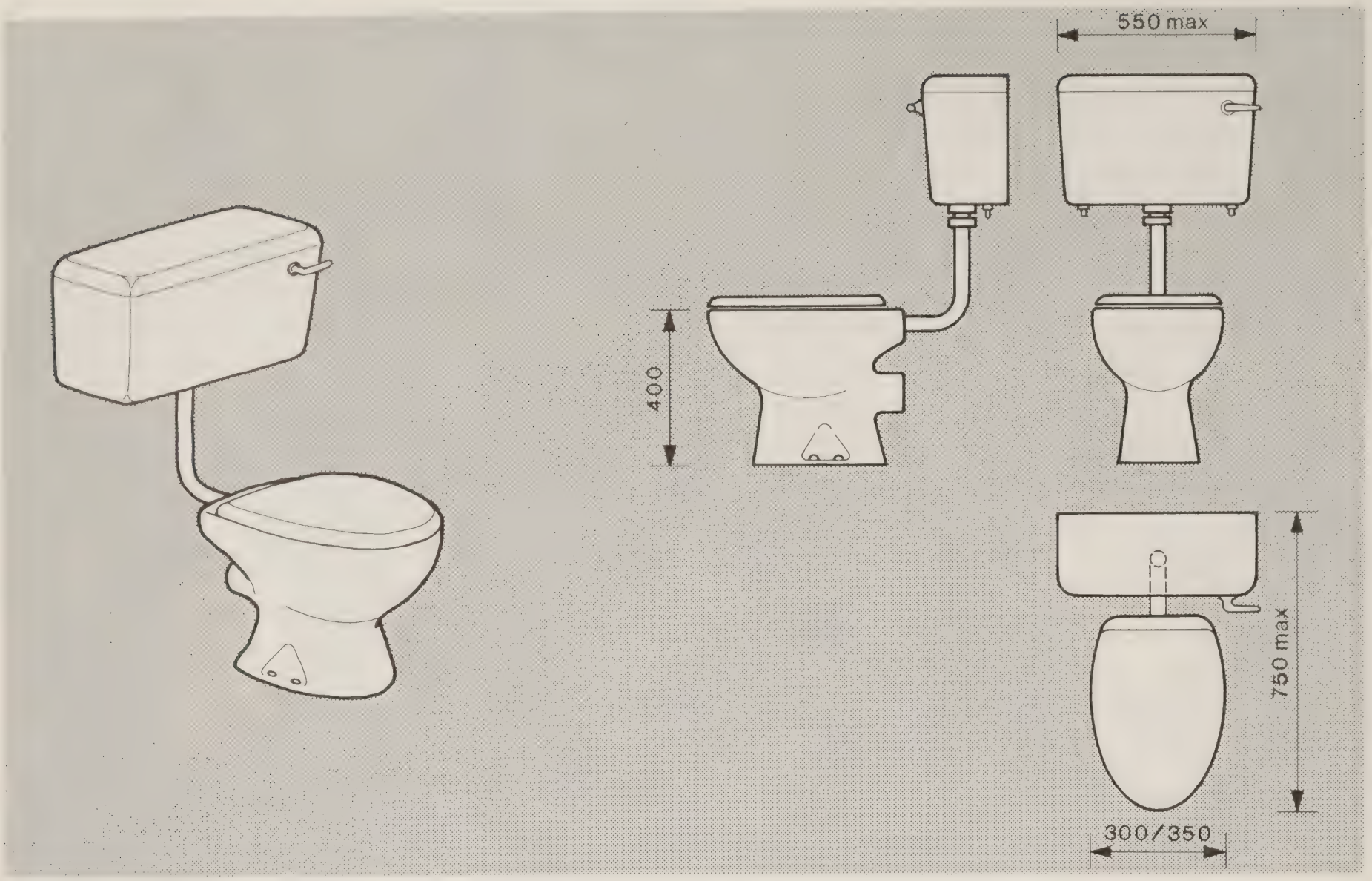

Identification

Low level wash-down wc with exposed cistern and pipework.

Standards

Vitreous china:-	BS 3402
Wash-down wc pans with horizontal outlet, generally as:-	BS 5503
WC flushing cisterns:-	BS 1125
Float operated valves:	
Diaphragm type:-	BS 1212
Floats (plastics) for ball valves:-	BS 2456
WC seats (plastics):-	BS 1254

Description

White vitreous china wash-down pan (rimless or shallow open rim) with 'P' trap.
White vitreous china cistern with secured cover and with bottom supply, overflow connections and short outlet tail, flushing pipework
½ in LP brass valve, plastics float and siphon.
CP metal flushing handle.
White plastics ring seat and cover, set on easy-clean metal hinges with shortened fixing bolts.
Any necessary fixing devices.

Options

Coloured glaze
Coloured seat and cover
½ in HP brass valve

Application

Not suitable for use in connection with Medical/Nursing procedures.

Fixing/Installation

Pan prepared for screw fixings to floor; use screws with domed covers.
Cistern prepared for concealed screw fixings.
Cover secured with screws.

- Make provision for discharge of overflow warning pipe.
- Should only be fed from tanked supply.
- Use HP valve option when connecting to water supply pressure in excess of 1.35 bar.

Cleaning/Maintenance

Exposed surfaces smooth and easily cleaned, free from inaccessible crevices and protrusions.

WC G/C Close Coupled Wash-Down WC

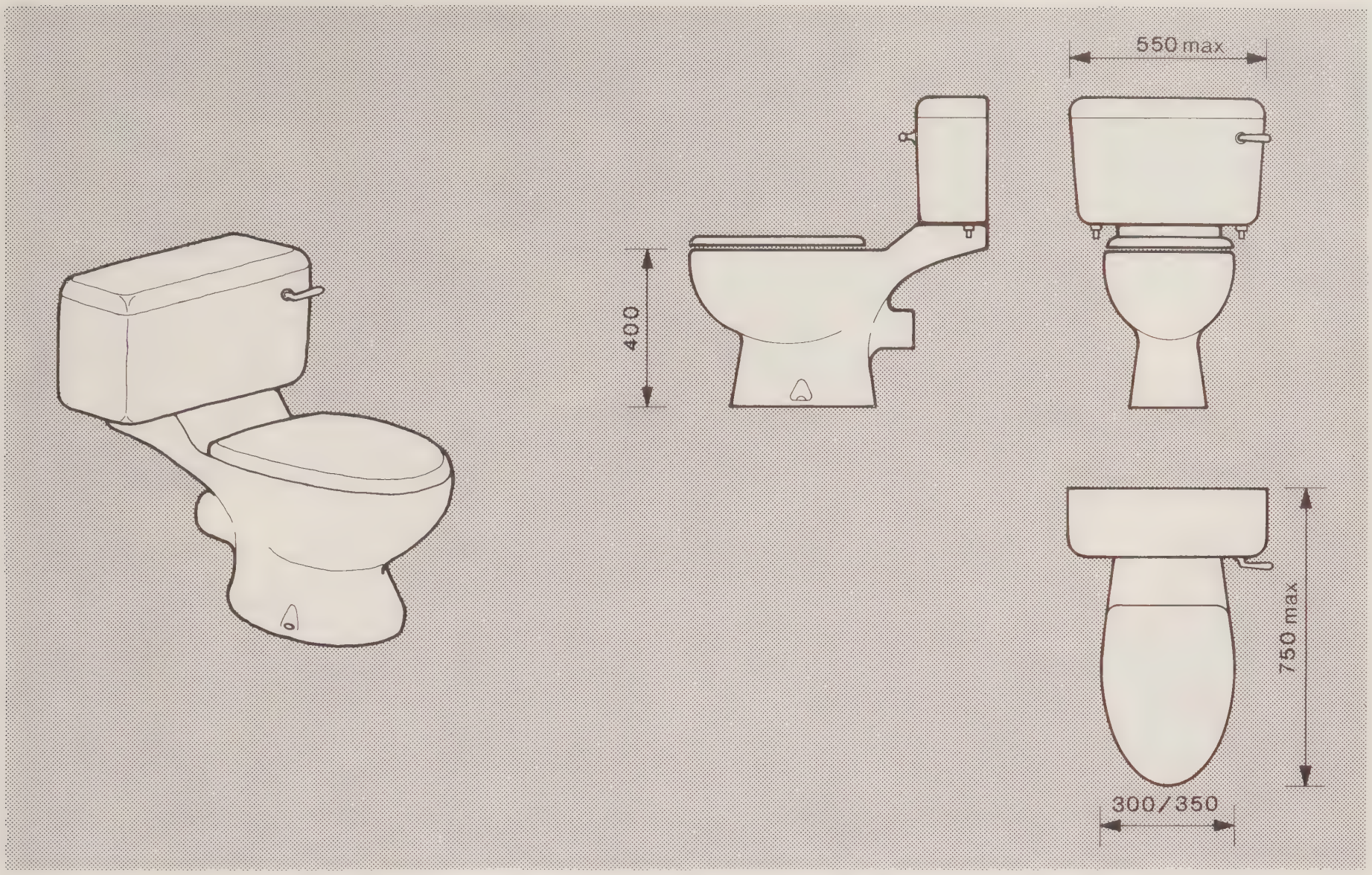

Identification

Close coupled wash-down wc with exposed cistern.

Standards

Vitreous china:-	BS 3402
Wash-down wc pans with horizontal outlet:-	BS 5503
WC flushing cisterns:-	BS 1125
Float operated valves: Diaphragm type:-	BS 1212
Floats (plastics) for ball valves:-	BS 2456
WC seats (plastics):-	BS 1254

Description

White vitreous china wash-down pan with rimless or perforated box rim and with 'P' trap.
White vitreous china cistern with secured cover, bottom supply and overflow connections.
½in LP brass valve, plastics float and siphon.
CP metal flushing handle.
White plastics ring seat and cover, set on easy-clean metal hinges with shortened fixing bolts.
Any necessary fixing devices.

Options

Coloured glaze
Coloured seat and cover
½ in HP brass valve

Application

Not suitable for use in connection with Medical/Nursing procedures.

Fixing/Installation

Pan prepared for screw fixings to floor; use screws with domed covers.
Cistern prepared for concealed screw fixings.
Cover secured with screws.

- Make provision for discharge of overflow warning pipe.
- Should only be fed from tanked supply.
- Use HP valve option when connecting to water supply pressure in excess of 1.35 bar.

Cleaning/Maintenance

Exposed surfaces smooth and easily cleaned, free from inaccessible crevices and protrusions.

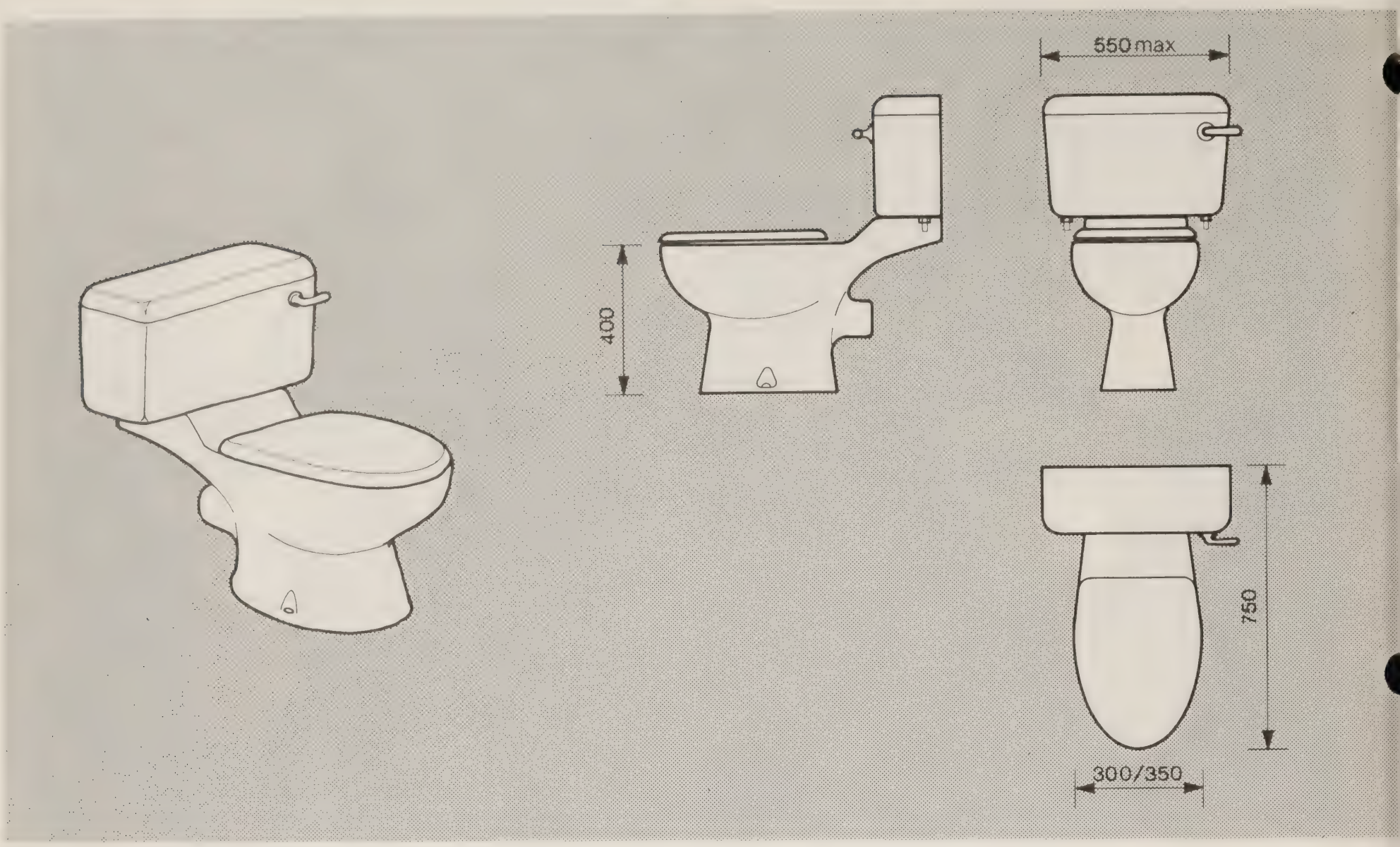

Identification

Close coupled double trap siphonic wc with exposed cistern.

Standards

Vitreous china:-	BS 3402
WC flushing cisterns:-	BS 1125
Float operated valves:	
Diaphragm type:-	BS 1212
Floats (plastics) for ball valves:-	BS 2456
WC seats (plastics):-	BS 1254

Description

White vitreous china pan with rimless or perforated box rim and with 'P' trap.
White vitreous china cistern with secured cover, bottom supply and overflow connections.
½in LP brass valve, plastics float and siphon.
CP metal flushing handle.
White plastics ring seat and cover, set on easy-clean metal hinges with shortened fixing bolts.
Any necessary fixing devices.

Options

Coloured glaze.
Coloured seat and cover.
½ in HP brass valve.

Application

Not suitable for use in connection with Medical/Nursing procedures but where quiet operation is important.

Fixing/Installation

Pan prepared for screw fixings to floor; use screws with domed covers.
Cistern prepared for concealed screw fixings.
Cover secured with screws.

- Make provision for discharge of overflow warning pipe.
- Should only be fed from tanked supply.
- Use HP valve option when connecting to water supply pressure in excess of 1.35 bar.

Cleaning/Maintenance

Exposed surfaces smooth and easily cleaned, free from inaccessible crevices and protrusions.

LB H/S .../M.../L Hospital Pattern Basins

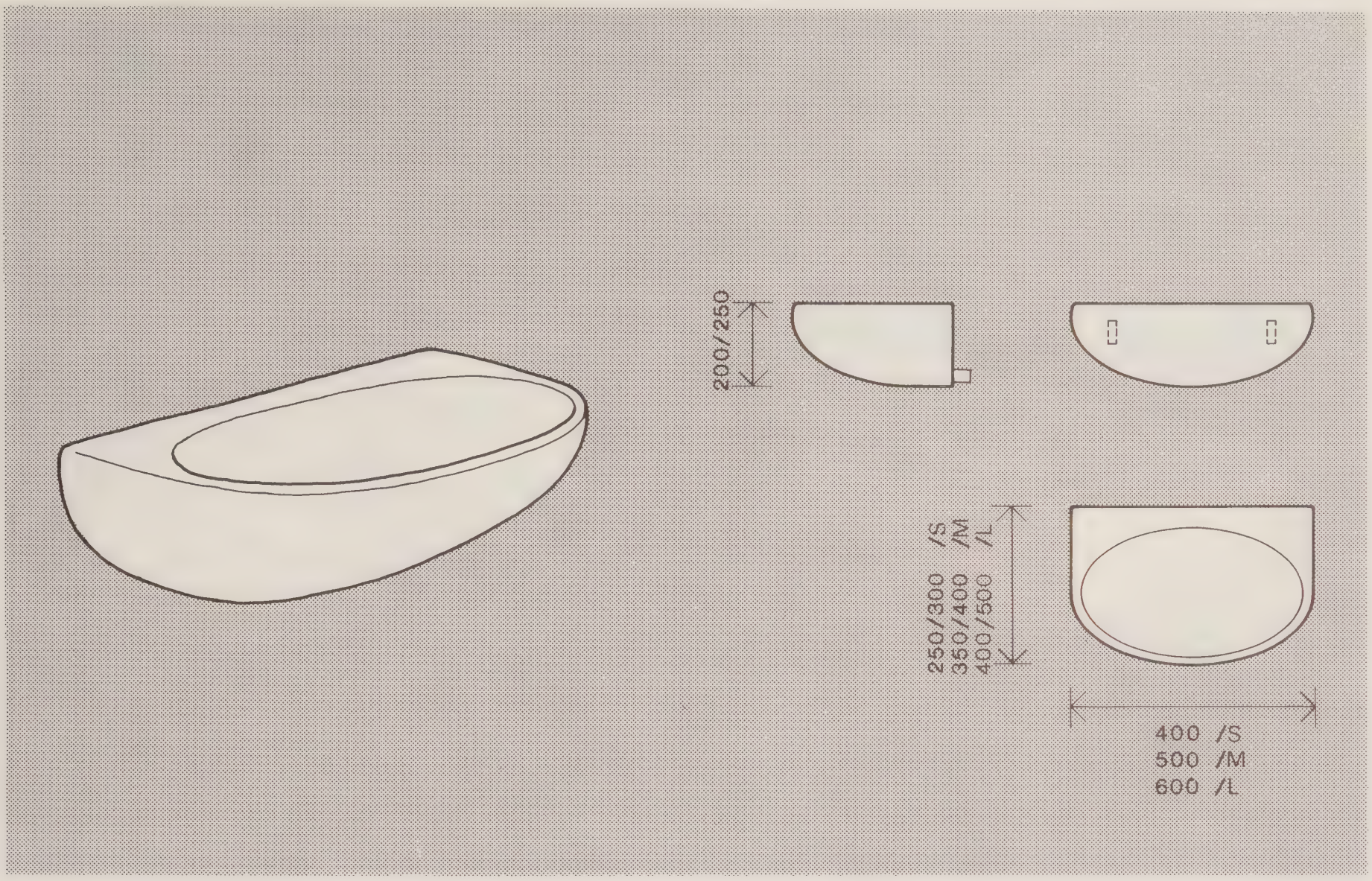

Identification

Wall mounted basin available in three sizes; small, medium or large with back outlet.

Standards

Vitreous china:- BS 3402

Description

White vitreous china basin with concealed fixings, no tap holes, no overflow, maximum bowl size.
Back outlet connection to concealed services.
Any necessary support brackets.

Options

Coloured glaze.

Application

For use with concealed services; use with wall mounted supply fittings. Suitable for use by seated patients.

Fixing/Installation

Basin mounted on concealed brackets and fixings suitable for duct panels.

Cleaning/Maintenance

Exposed surfaces smooth and easily cleaned.

LB G/S ... /M ... /L General Basin

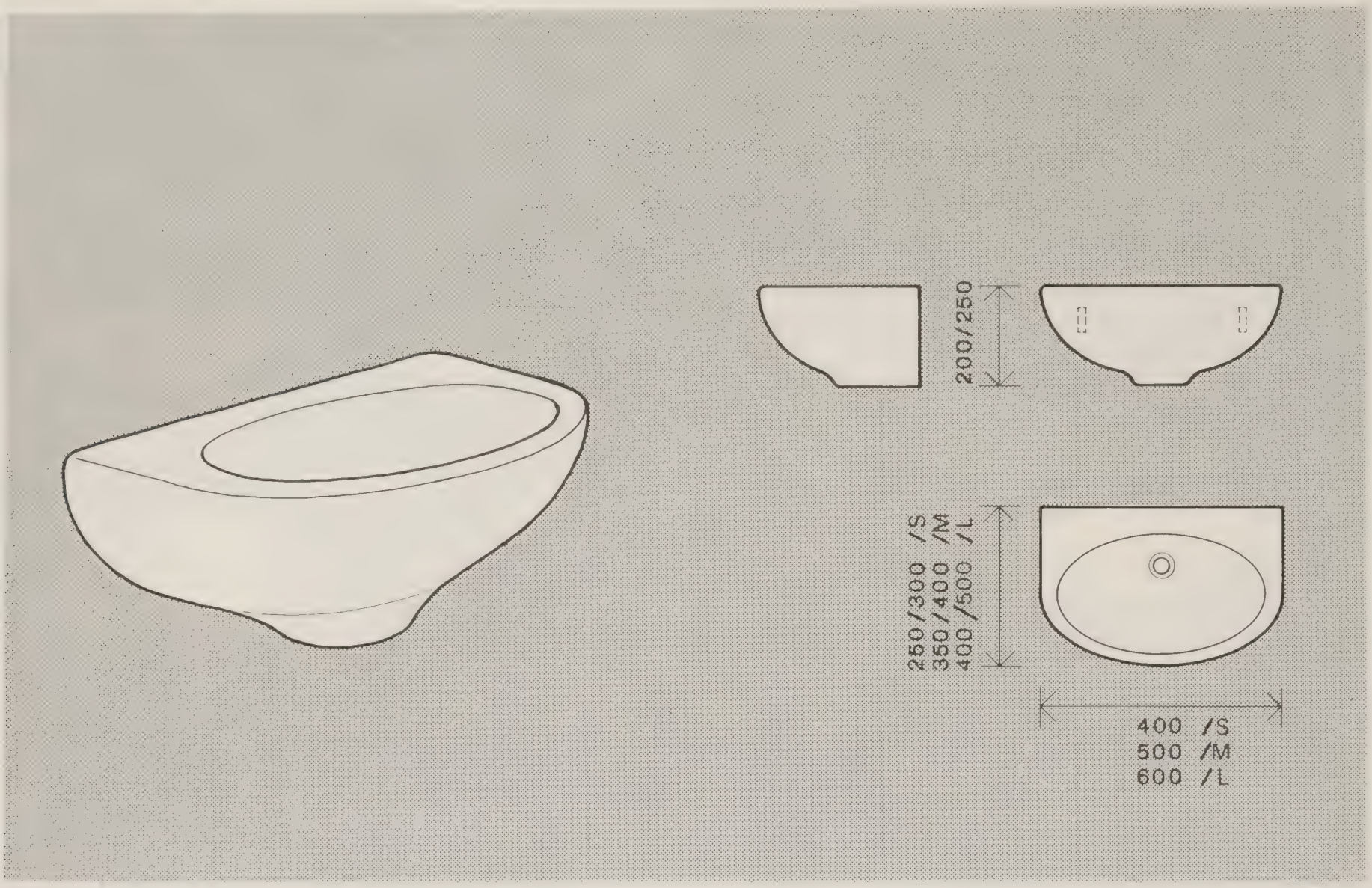

Identification

Wall mounted basin available in three sizes; small, medium or large with bottom outlet.

Standards

Vitreous china:- BS 3402

Description

White vitreous china basin with concealed fixings, no tap holes, no overflow, maximum bowl size.
Bottom outlet.
Any necessary support brackets.

Options

On medium basin - two tap holes.
On medium or small basin - one tap hole, right hand.
Coloured glaze.

Application

For use with concealed services; use with wall mounted supply fittings.
Use tap hole option(s) with pillar supply fittings.

Fixing/Installation

Basin mounted on concealed brackets and fixings suitable for duct panels.

Cleaning/Maintenance

Exposed surfaces smooth and easily cleaned.

BA H/M Hospital Pattern Metal Bath

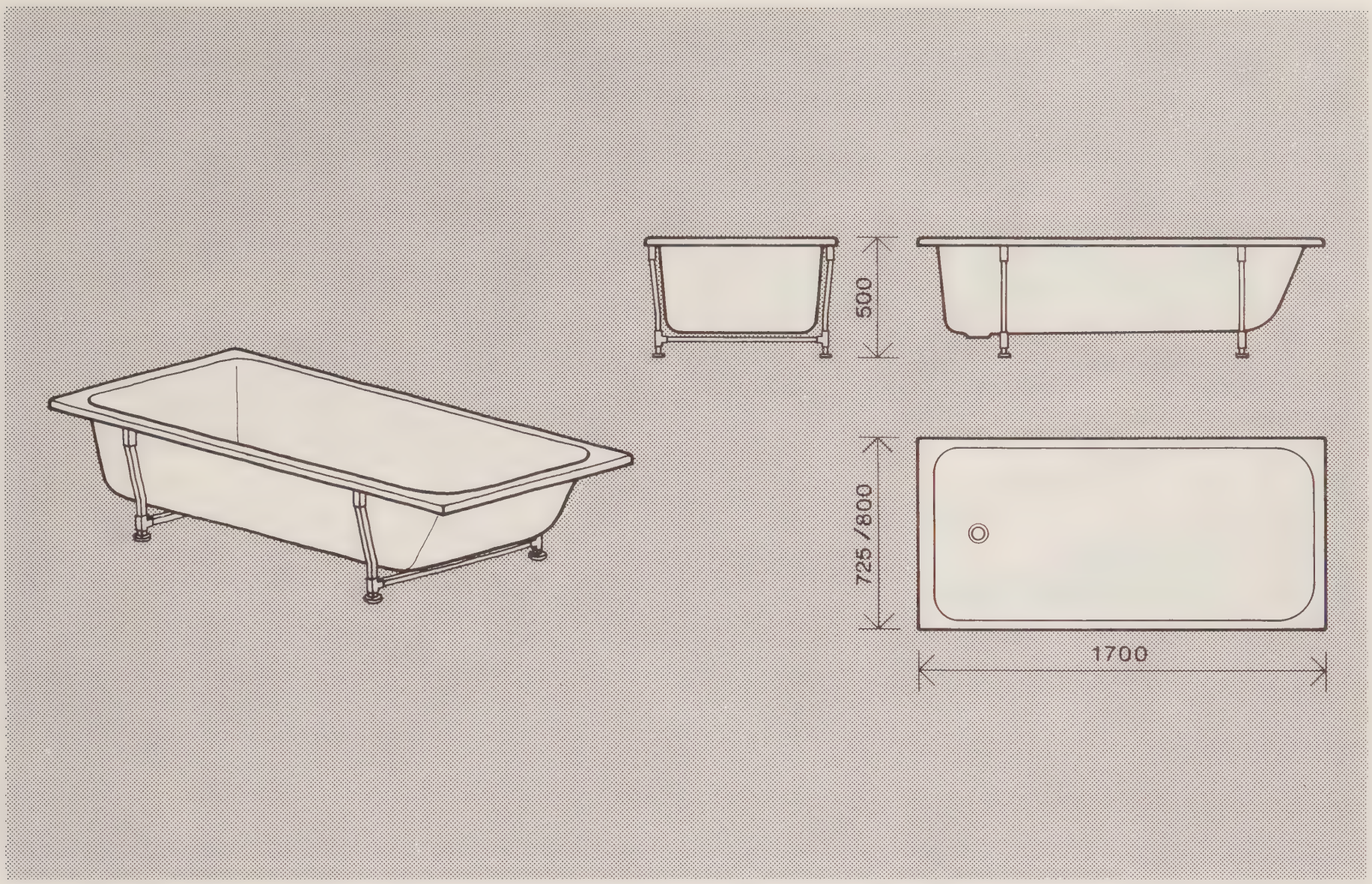

Identification

Flat topped metal bath for assisted use.

Standards

Sheet steel baths for domestic purposes:-	BS 1390
Cast Iron baths for domestic purposes:-	BS 1189
Vitreous Enamel:-	BS 1344

Description

Vitreous/Porcelain enamelled pressed steel 2.5 mm thickness or cast iron bath with slip resistant bottom, no tap holes, no overflow, no chain stay hole, no handles.
Suitable for use with patient hoists.
Smooth finish to external surfaces.
Supporting framework/legs with adjustable feet.
Any necessary fixing devices.
Earthing terminal.

Options

Coloured enamel.
Handle(s) - **Note:** Bath recessed to accommodate non-projecting handle(s).

Application

For use with concealed services; use with wall mounted supply fittings.

Fixing/Installation

Framework set on plinth. Provision for builders work plinth and panels to one end and two sides.

Cleaning/Maintenance

Exposed surfaces smooth and easily cleaned.
Exposed surfaces of builders work panels and plinth finish with melamine or similar material.

BA H/P Hospital Pattern Plastics Bath

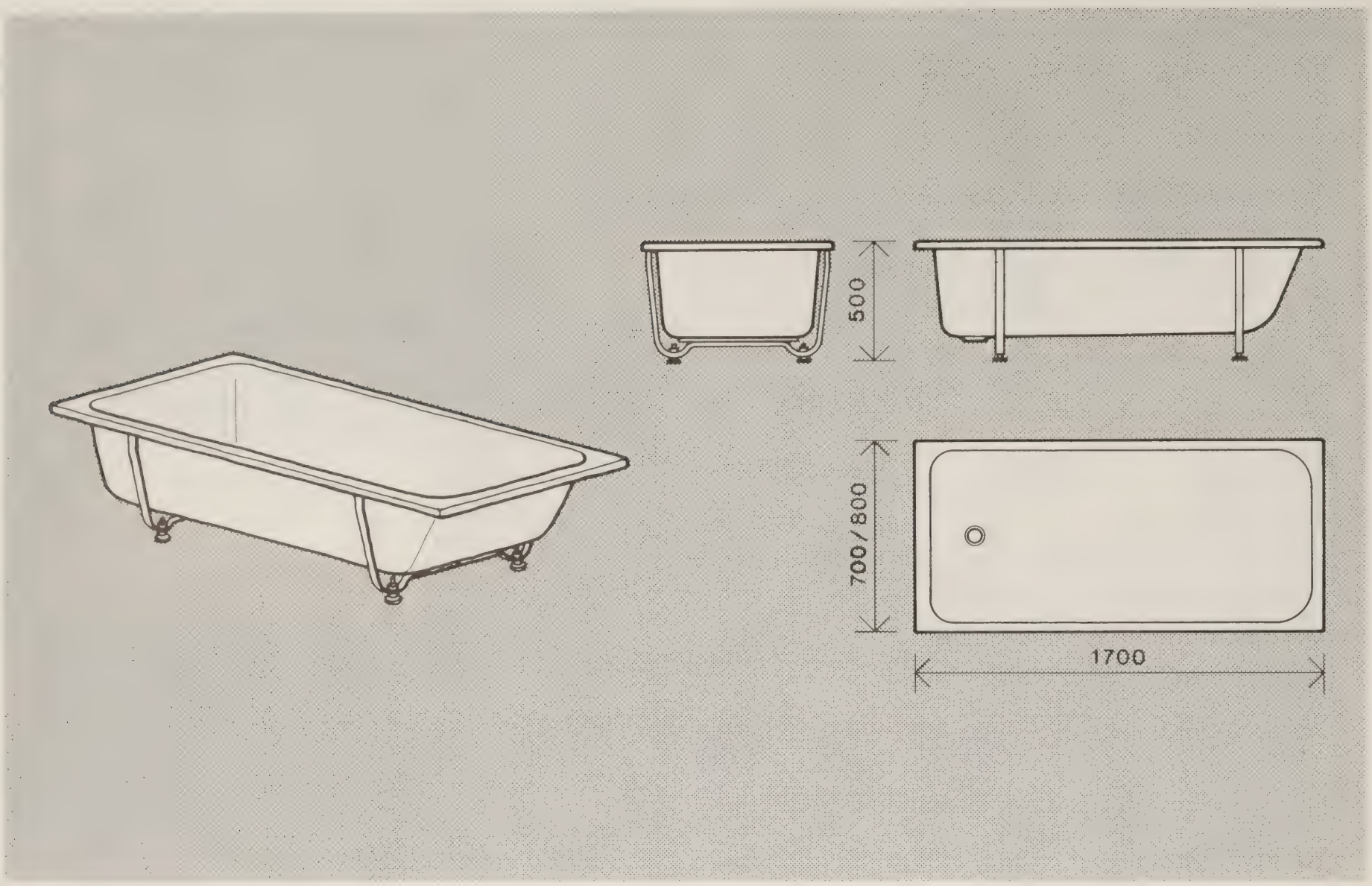

Identification

Flat topped plastics bath for assisted use.

Standards

Cast acrylic baths for domestic purposes, generally as:- BS 4305

Description

5 mm nominal thickness specially reinforced white plastics bath with slip resistant bottom, no tap holes, no overflow, no chain stay hole, no handles.
Suitable for use with patient hoists.
Smooth finish to external surfaces.
Rust proof metal supporting framework and adjustable feet.
Any necessary fixing devices.

Options

Coloured plastics.
Handle(s) - **Note:** Bath recessed to accommodate non-projecting handle(s).

Application

For use with concealed services; use with wall mounted supply fittings.

Fixing/Installation

Framework set on plinth. Provision for builders work plinth and panels to one end and two sides.

Cleaning/Maintenance

Exposed surfaces smooth and easily cleaned.
Exposed surfaces of builders work panels and plinth finish with melamine or similar material.

BA G General Bath

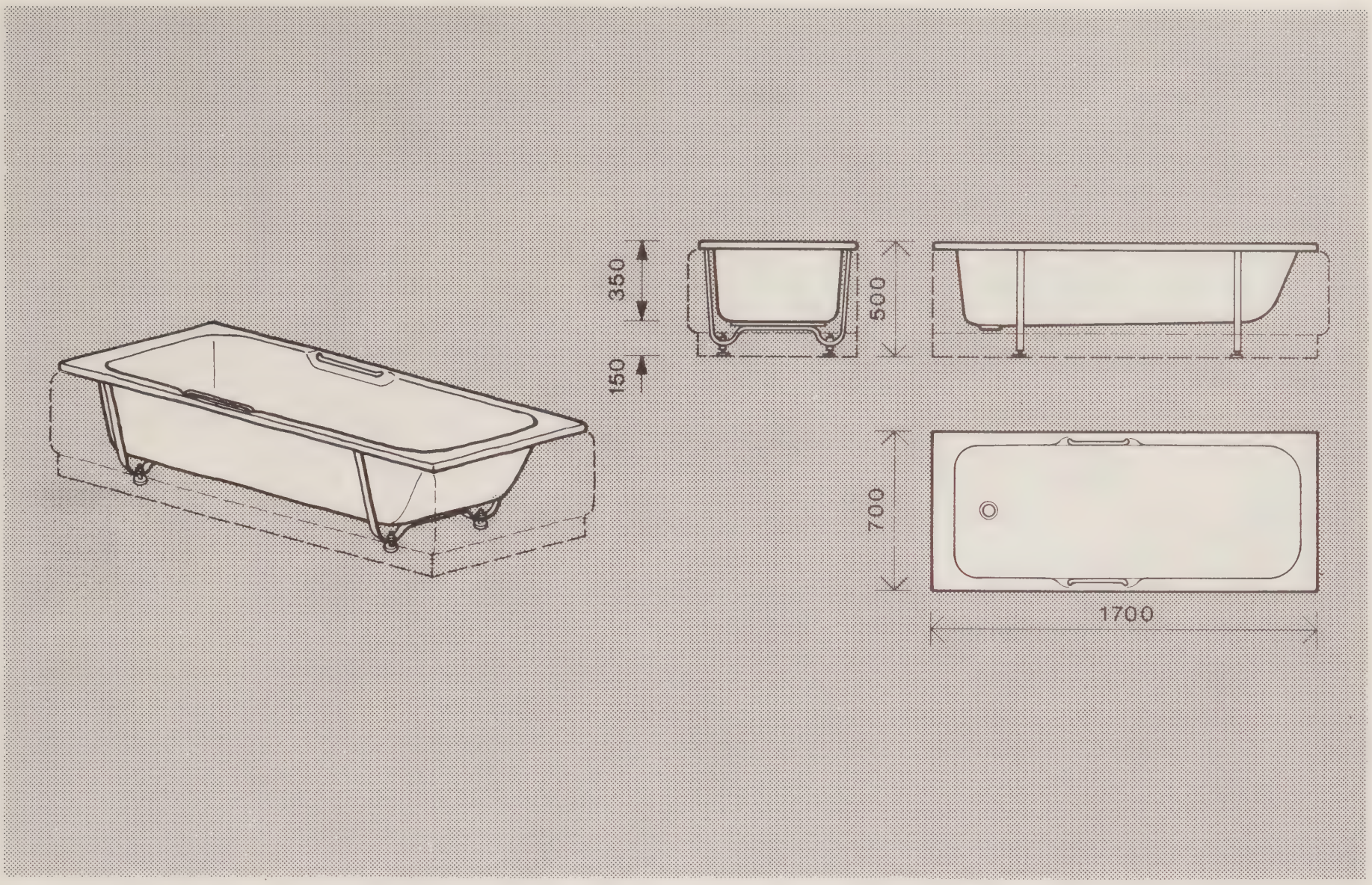

Identification

Flat topped plastics bath with overflow.

Standards

Cast acrylic baths
for domestic purposes:- BS 4305

Description

5 mm thick, fully reinforced, white plastics bath with two recessed handles, no tap holes, supporting framework, adjustable feet.

Options

Coloured plastics.
Matching removable end and side panels with recessed toe space.

Application

Not suitble for assisted use.

Fixing/Installation

Framework set on floor; (panels secured by concealed fixings).
If used with pillar taps drill on site for tap holes.
Note: plumbing installation is simplified by using corner tap holes.

Cleaning/Maintenance

Exposed surfaces to be smooth and easily cleaned.

BD H Hospital Pattern Bidet

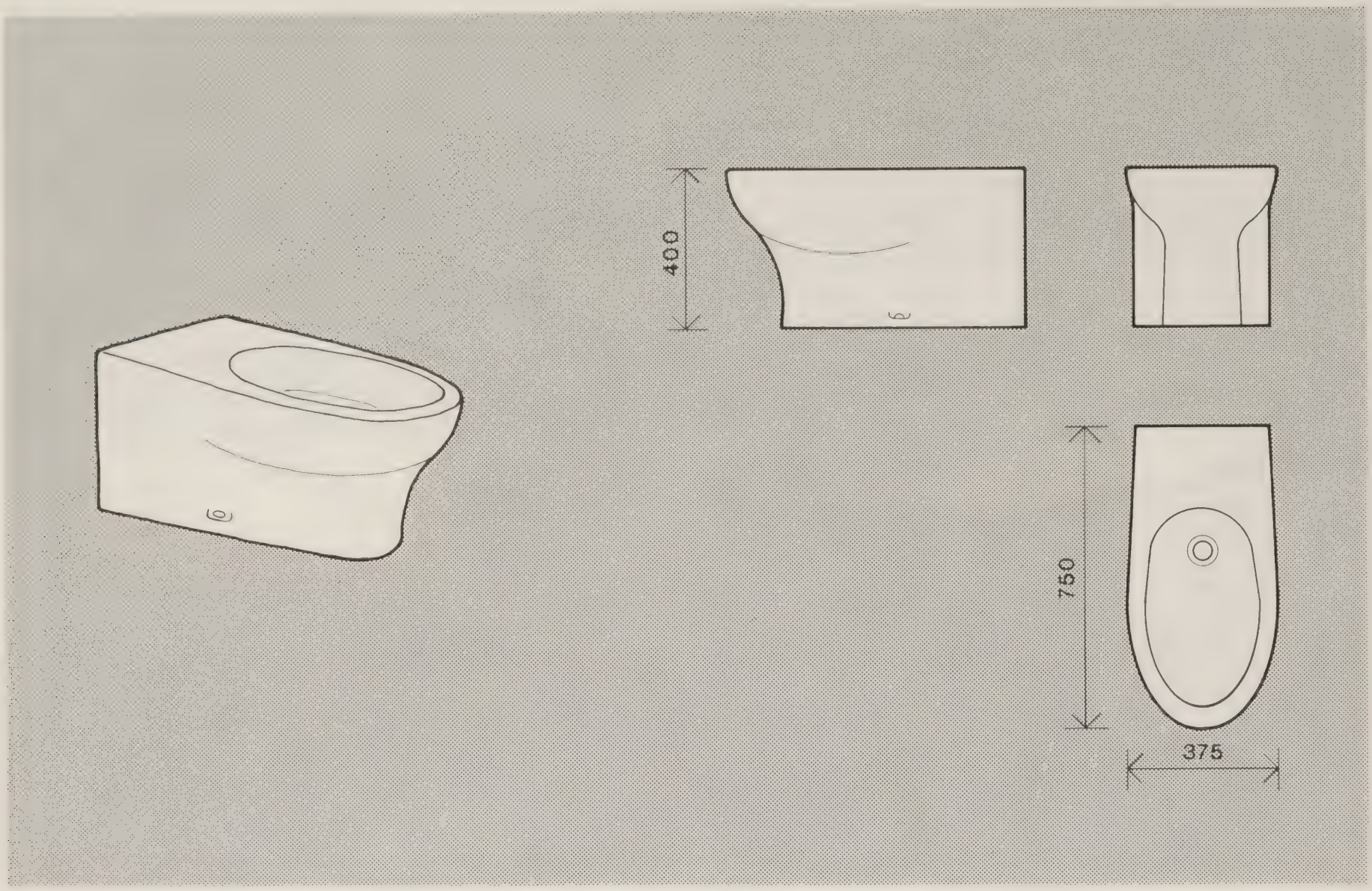

Identification

Back to wall pedestal bidet.

Standards

Vitreous china:-	BS 3402
Wastes:-	BS 3380

Description

White vitreous china bidet, rimless with no tap holes, no overflow, with outlet to suit 1¼ in (32 mm) waste, no plug.

Options

Coloured glaze.
With extension piece if necessary to achieve 750 mm projection.

Application

Use with wall mounted thermostatic mixer valve with handset spray.

Fixing/Installation

Prepared for screw fixing to floor. Special provision against back-siphonage is requirted (Refer to water bye-laws).

Note: Supply fitting must only be fed from tanked supply.

Cleaning/Maintenance

Exposed surfaces to be smooth and easily cleaned. Exposed surfaces of extension piece finish with melamine or similar material.

FO H Hospital Pattern Floor Outlet

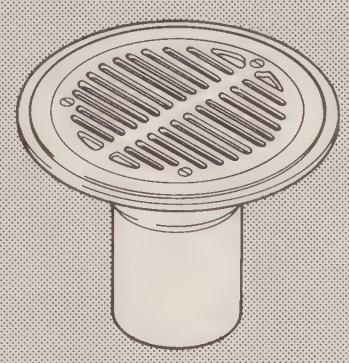

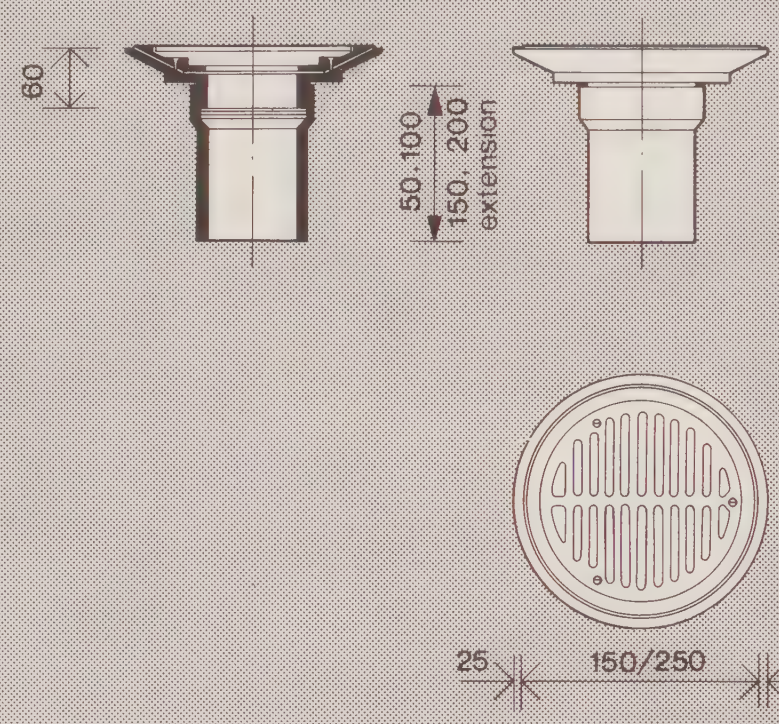

Identification

Floor drainage outlet and grating.

Standards

Cast iron:-	BS 3468
Stainless steel:-	BS 1449:Part 2

Description

A non rusting shower outlet with Nickel Bronze screw down grating, surface clamping ring and 100 mm diameter outlet spigot with threaded tail.
Cast iron extension (specify length 50, 100, 150 or 200 mm) with internal thread for connection to outlet and plain tail.

Options

Stainless steel grating.
Polished Bronze grating.
Rough Bronze galvanised extension.
Threaded tail to extension piece.

Application

Suitable for use in connection with Medical/Nursing procedures where showers are formed in builders work.

Fixing/Installation

Grout into floor, seal spigot to drain and seal floor finish to rim of outlet.

Cleaning/Maintenance

Exposed surfaces smooth and easily cleaned, no sharp edges.

FO G Floor Outlet

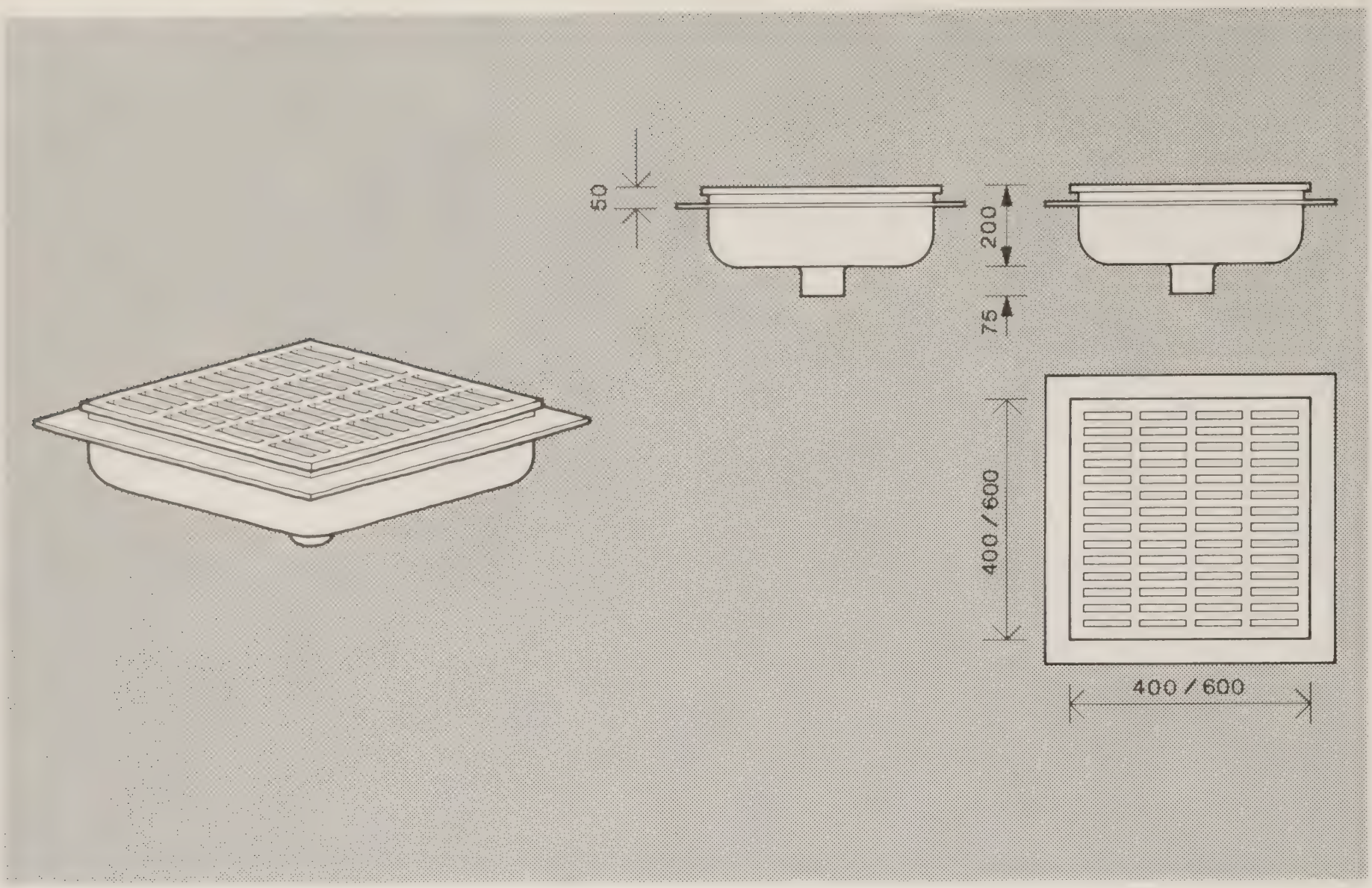

Identification

Floor drainage outlet and grating.

Standards

Cast iron:-	BS 3468
Stainless steel:-	BS 1449:Part 2
Galvanized coatings:-	BS 729

Description

A non rusting drainage hopper for disposal of bulk liquids and liquid wastes from floor cleaning machines: with lift-out non-rocking stainless steel grating, 100 mm diameter outlet spigot, and flange to receive floor finishes.

Options

Galvanized cast iron grating.

Application

Suitable for domestic service use in main cleaners rooms, service departments etc.
Use with wall mounted hot and cold taps and length of hose.

Fixing/Installation

Grout into floor, seal spigot to drain and seal floor finish to rim of outlet.

Cleaning/Maintenance

Exposed surfaces smooth and easily cleaned, no sharp edges.

PS H Hospital Pattern Plaster Sink

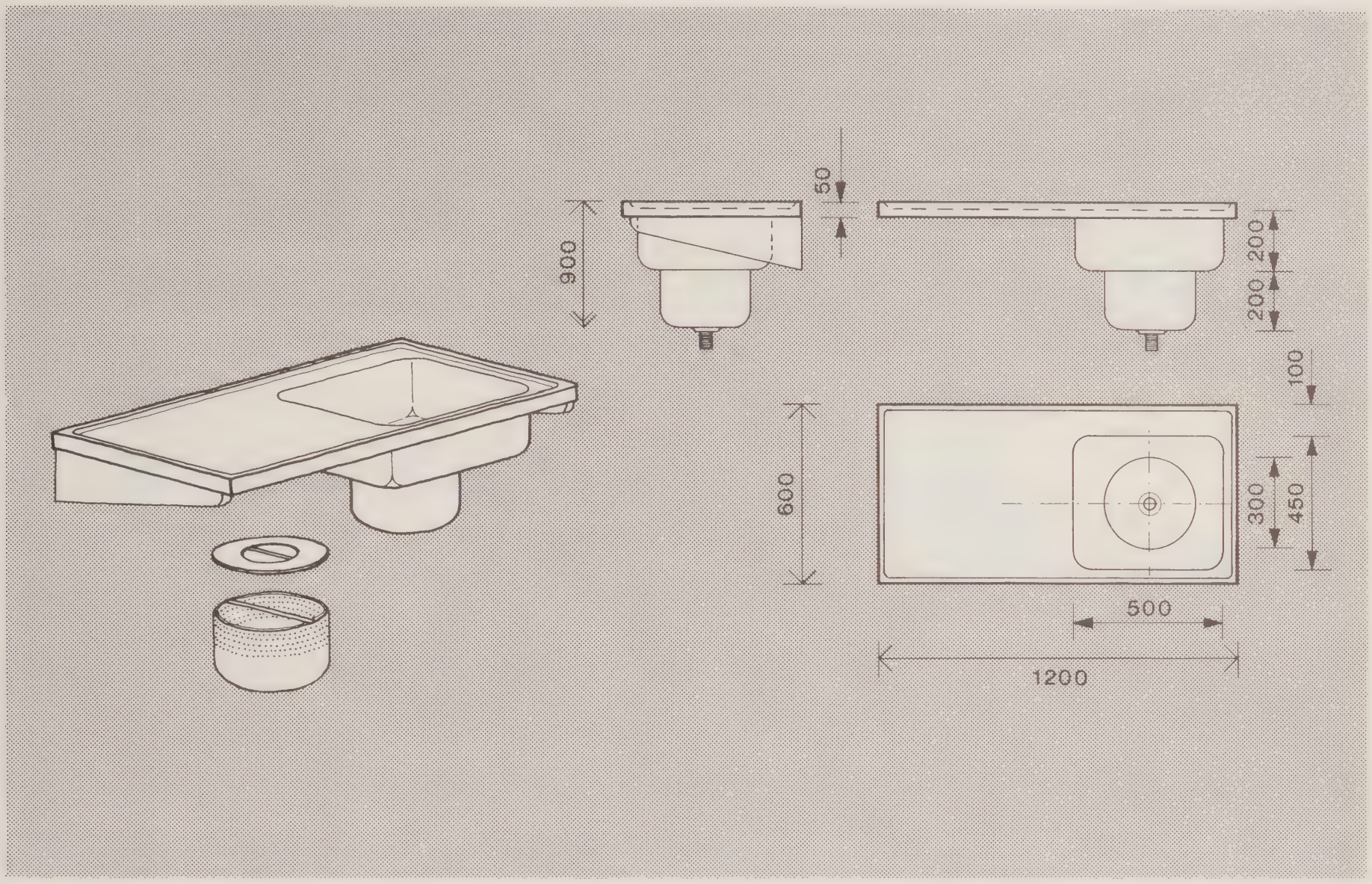

Identification

Stainless steel plaster sink with integral plain top.
Left hand unit (illustrated).

Standards

Stainless steel type 304 SI6:-	BS 1449:Part 2
Wastes:-	BS 3380

Description

A plain top of stainless steel (min. 16 swg or where press formed 18 swg) with no tapholes, no upstand, edges rimmed (min 13 mm high) and turned down, underside sound deadened with smooth impermeable easily cleaned material and/or underlined with stainless steel. The top incorporates a rectangular sink bowl, without overflow, with a round sump, containing a partially perforated stainless steel basket and covered by a close fitting stainless steel cover with recessed handle.
1½ in (38 mm) unslotted flush grated waste (CP on brass).
Stainless steel wall mounting brackets.
All exposed stainless steel finished No. 3B; outside of sink and sump finished bead blast.
Earthing terminal.

Options

Tap holes
Stainless steel support frame in lieu of wall brackets.
Right hand unit.
Front edge profiles may be square as illustrated or with rollfront edge (and upstand at rear) to suit profile shown in HTM 62 and 63.
650 depth where matching HTM 63 worktop profile.

Application

Use with bib taps.
Use option with tap holes when supply pipework is surface mounted below sink top.
Suitable for mounting on wall brackets, stand supports, or base unit.

Fixing/Installation

Concealed fixing clips.

Cleaning/Maintenance

Exposed surfaces smooth and easily cleaned, no sharp edges, all internal corners radiused.

SU H/1 .../2 .../3 Hospital Pattern Scrub-Up Trough

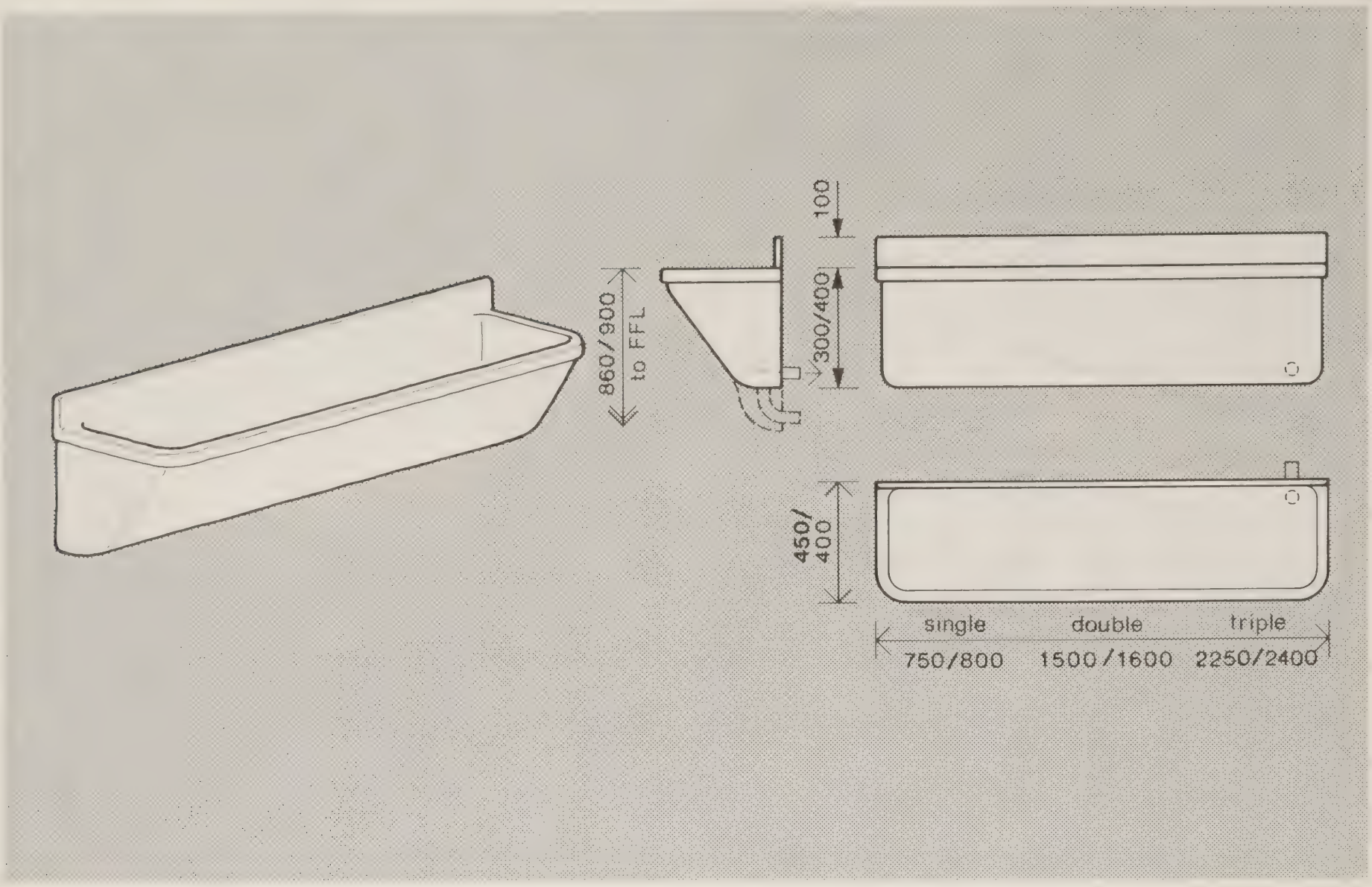

Identification

Wall mounted stainless steel scrub-up trough. Left hand outlet.

Standards

Stainless steel - type 304 SI6 BS 1449:Part 2

Description

Stainless steel trough (min 16 swg) in three sizes; single, double, and triple person, shaped to avoid splashing, with all internal corners radiused, outlet at one end to suit 1½ in (38 mm) connection to concealed pipework in duct.
Any necessary fixing devices.
All exposed stainless steel finished No. 3B; outside of trough finished bead blast.
Earthing terminal.

Options

Other lengths to special order.
Left hand outlet.
Shrouded bottom outlet with 90 degree bend in stainless steel.
High backed upstand - specify dimension.

Application

For use with concealed services; use with wall mounted supply fittings.

Fixing/Installation

Concealed fixings suitable for duct panels and for masonry.

Cleaning/Maintenance

Exposed surfaces smooth and easily cleaned, no sharp edges.

450/400

SH G/P Plastics Shower Receiver

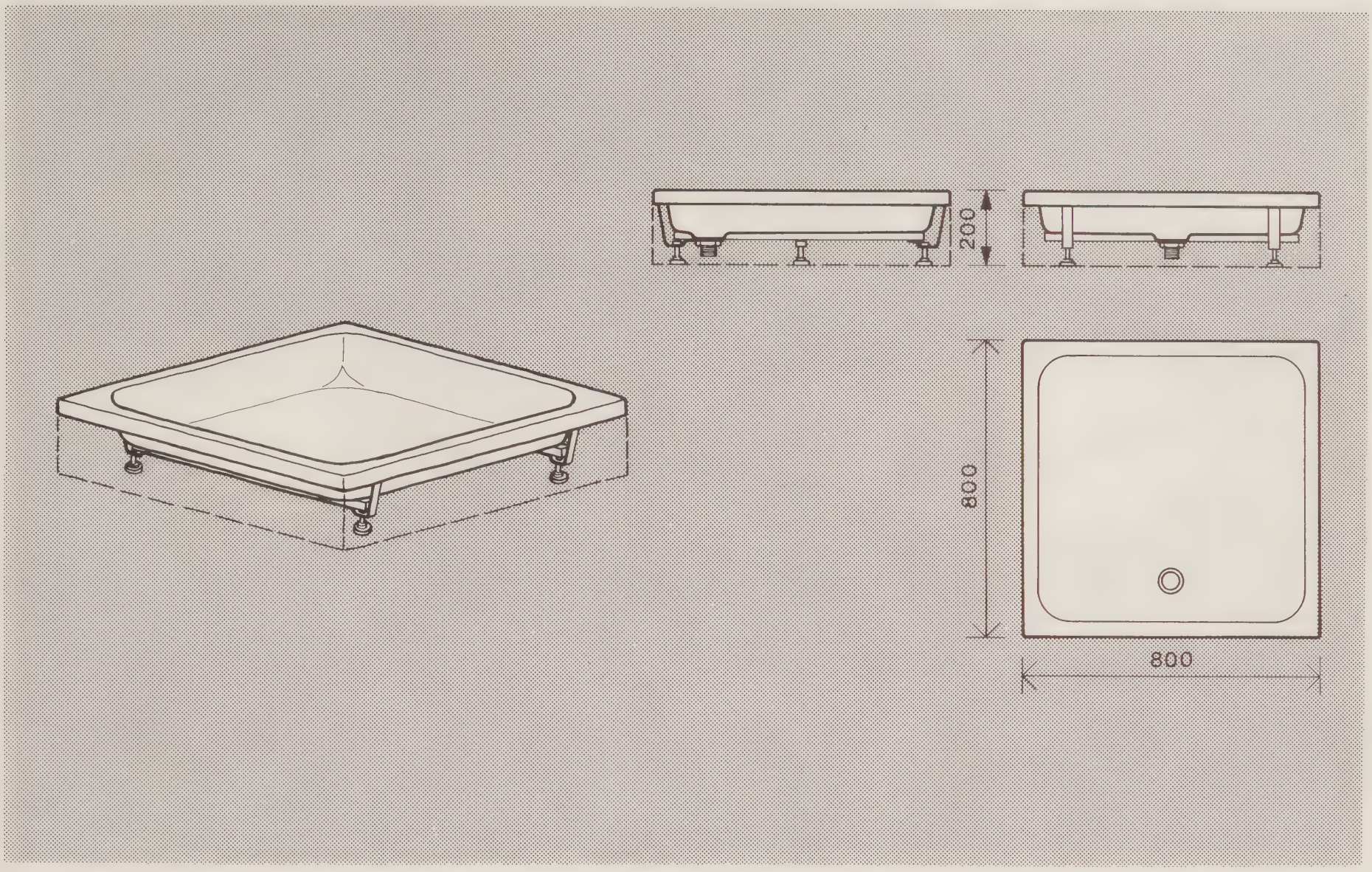

Identification

Floor standing square plastics shower tray (receiver).

Standards

Shower units:-	BS 6340:Part 1
	BS 6340:Part 2
Specification for prefabricated shower trays made from acrylic material:-	BS 6340:Part 5

Description

Minimum 5mm thick white plastics tray.
Slip resistant base
1½ in (38mm) CP on brass flush strainer waste with removable grate.
Any necessary support framework and fixing devices in non rusting materials.

Options

Coloured plastics.
Enclosing panels on front only.
or on front and one side
or on front and two sides

Application

For use with wall mounted supply fittings.
Not for patient use.

Fixing/Installation

Install with outlet to front for ease of access to waste.
Framework set on floor; panels secured by concealed fixings.

Cleaning/Maintenance

Exposed surfaces smooth and easily cleaned.

SH G/C Ceramic Shower Receiver

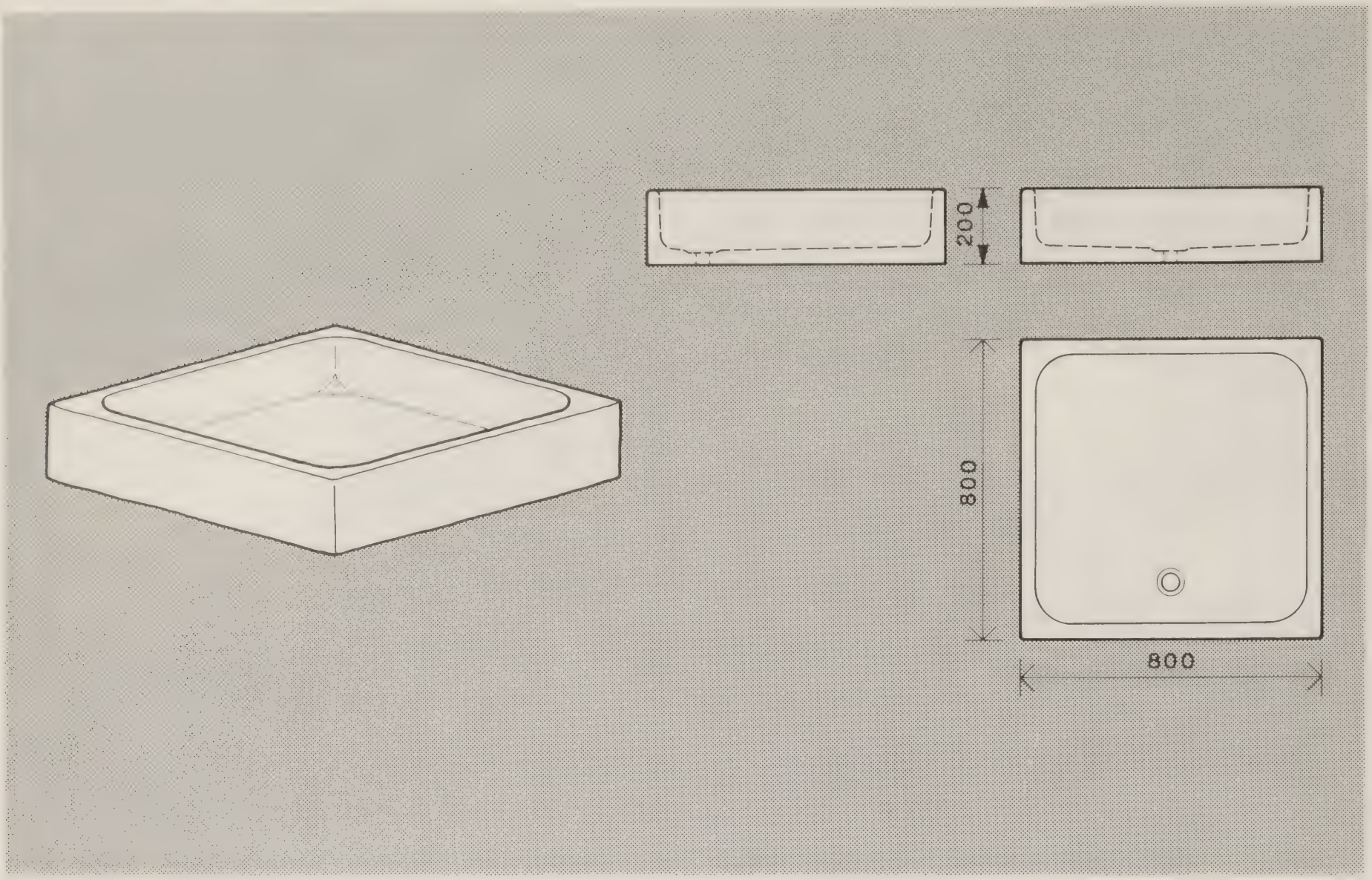

Identification

Floor standing square ceramic shower tray (receiver).

Standards

Shower unit:-	BS 6340:Part 1 BS 6340:Part 2
Specification for prefabricated shower trays made from glazed ceramic:-	BS 6340:Part 8

Description

White ceramic tray.
Slip resistant base.
1½ in (38mm) CP on brass flush strainer waste with removable grate.

Options

Coloured glaze.

Application

For use with wall mounted supply fittings.
Not for patient use.

Fixing/Installation

Install with outlet to front for ease of access to waste.

Cleaning/Maintenance

Exposed surfaces smooth and easily cleaned.

SK/1 Single Bowl Sink

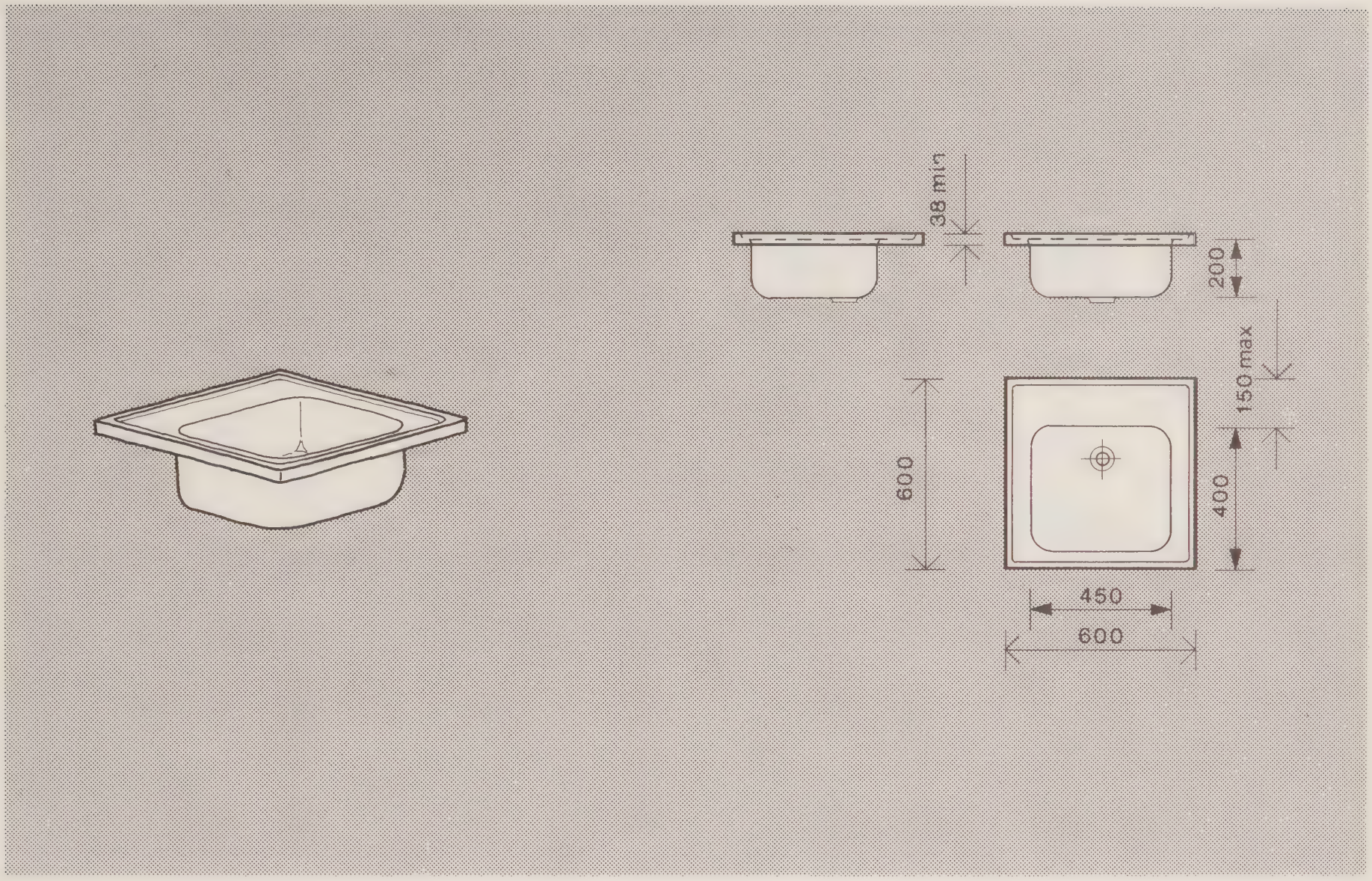

Identification

Sink bowl.

Standards

Stainless steel - type 304 SI6	BS 1449:Part 2
Metal sinks:-	BS 1244:Part 2

Description

A rectangular stainless steel sink bowl (min 20 swg) with no tap holes, no overflow, no upstand, edges rimmed and turned down.
Concealed fixing clips.
All exposed stainless steel finished No. 3B; outside of bowl finished bead blast.
Earthing terminal.

Options

Tap holes.
Stainless steel brackets for wall mounting.
Stainless steel support framework.
Galvanised steel support framework.

Sink bowls may be located in stainless steel worktops, as shown in HTMs 62 and 63.

Front edge profiles may be square as illustrated or with roll front edge (and upstand at rear) to suit profile shown in HTMs 62 and 63.

650 deep when matching HTM 63 profile.
Stainless steel hinged grid when used as a bucket sink.

Application

For use with concealed services; use with wall mounted supply fittings.
Use option with tap holes when supply pipework is surface mounted below sink.
Suitable for mounting on base unit, wall brackets or stand support.

Fixing/Installation

Set on base and secure with fixing clips.

Cleaning/Maintenance

Exposed surfaces smooth and easily cleaned, no sharp edges.

SK/2 Double Bowl Sink

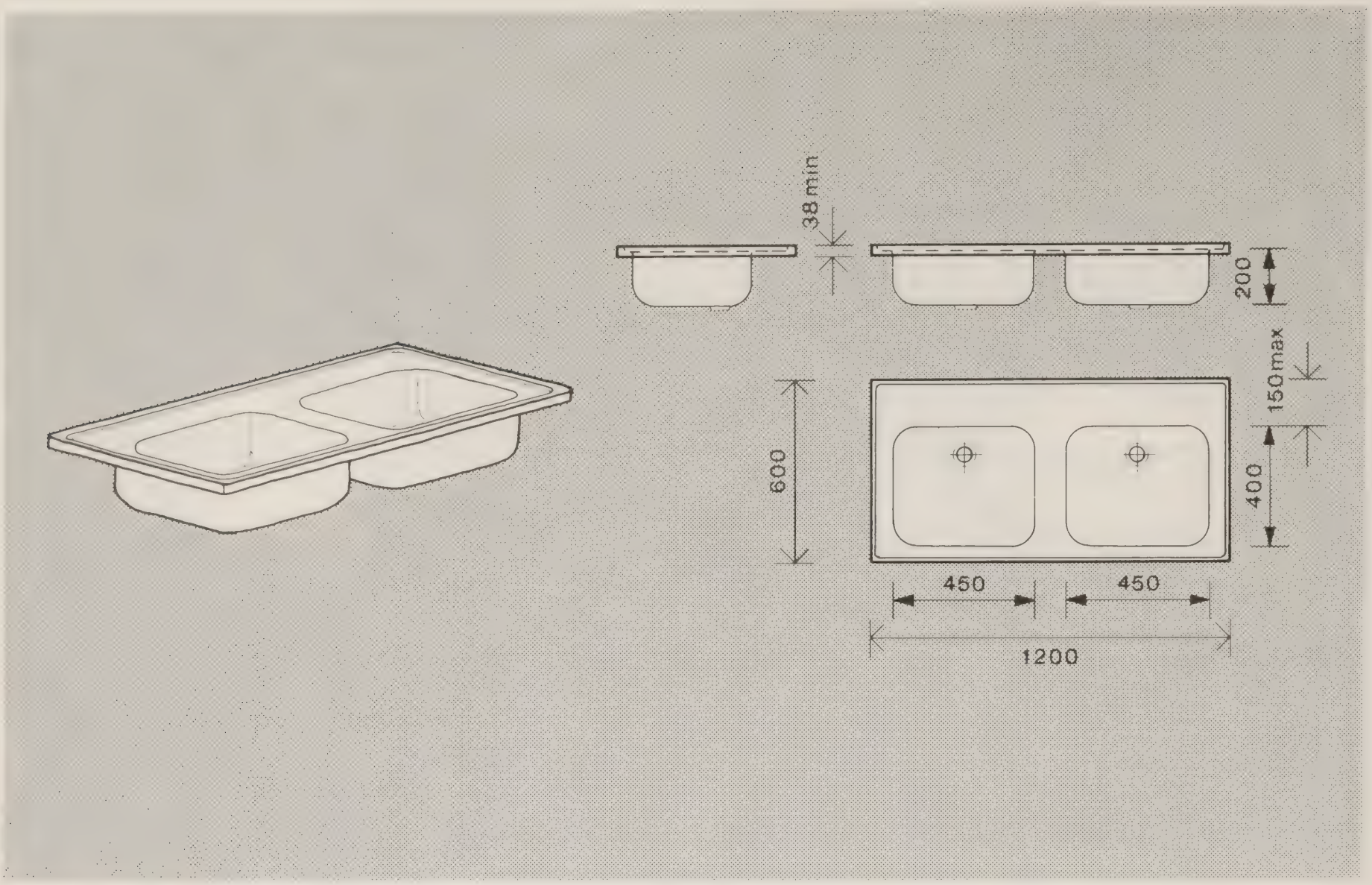

Identification

Double sink bowl.

Standards

Stainless steel - type 304 SI6	BS 1449:Part 2
Metal sinks:-	BS 1244:Part 2

Description

A double rectangular stainless steel sink bowl (min 20 swg) with no tap holes, no overflow, no upstand, edges rimmed and turned down.
Concealed fixing clips.
All exposed stainless steel finished No. 3B; outside of bowl finished bead blast.
Earthing terminal.

Options

Tap holes.
Stainless steel brackets for wall mounting.
Stainless steel support framework.
Galvanised steel support framework.

Sink bowls may be located in stainless steel worktops, as shown in HTMs 62 and 63.

Front edge profiles may be square as illustrated or with roll front edge (and upstand at rear) to suit profile shown in HTMs 62 and 63.

650 deep when matching HTM 63 profile.

Application

For use with concealed services; use with wall mounted supply fittings.
Use option with tap holes when supply pipework is surface mounted below sink.
Suitable for mounting on base unit, wall brackets or stand support.

Fixing/Installation

Set on base and secure with fixing clips.

Cleaning/Maintenance

Exposed surfaces smooth and easily cleaned, no sharp edges.

ST/A .../B .../C Sink Tops

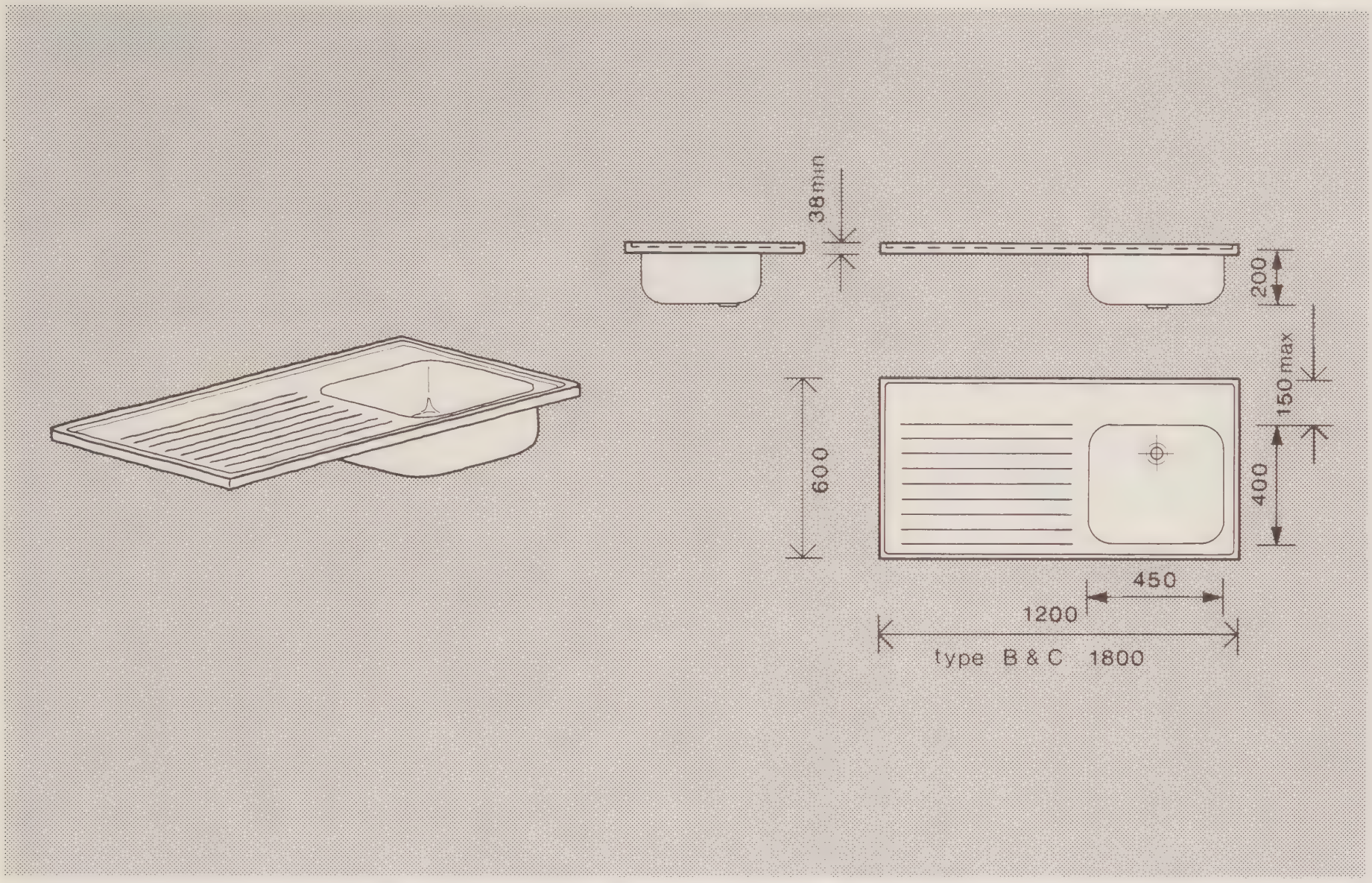

Identification

Sink top with integral drainer. Left hand unit (illustrated).

Standards

Stainless steel - type 304 SI6	BS 1449:Part 2
Metal sinks:-	BS 1244:Part 2

Description

A stainless steel sink top (min 18 swg) Type A with ribbed drainer, no tap holes, no overflow, no upstand, edges rimmed and turned down, incorporating a rectangular sink bowl (min 20 swg).
Underside sound deadened with smooth impermeable easily cleaned material and/or underlined with stainless steel.
Concealed fixing clips.
All exposed stainless steel finished No. 3B; outside of sink finished bead blast.
Earthing terminal.

Options

Right hand unit.
Type B single bowl and double drainer.
Type C double bowl and single drainer,
right or left hand.
Tap holes.
Brackets for wall mounting.
Galvanised metal support framework.

Front edge profiles may be square as illustrated or with roll front edge (and upstand at rear) to suit profile shown in HTMs 62 and 63.

650 deep when matching HTM 63 profile.

Application

For use with concealed services; use with wall mounted supply fittings.
Use option with tap holes when supply pipework is surface mounted below sink top.
Suitable for mounting on base unit, wall brackets, or stand support.

Fixing/Installation

Set on base and secure with fixing clips.

Cleaning/Maintenance

Exposed surfaces smooth and easily cleaned, no sharp edges.

TP1 ½in (12 mm) Pillar Tap

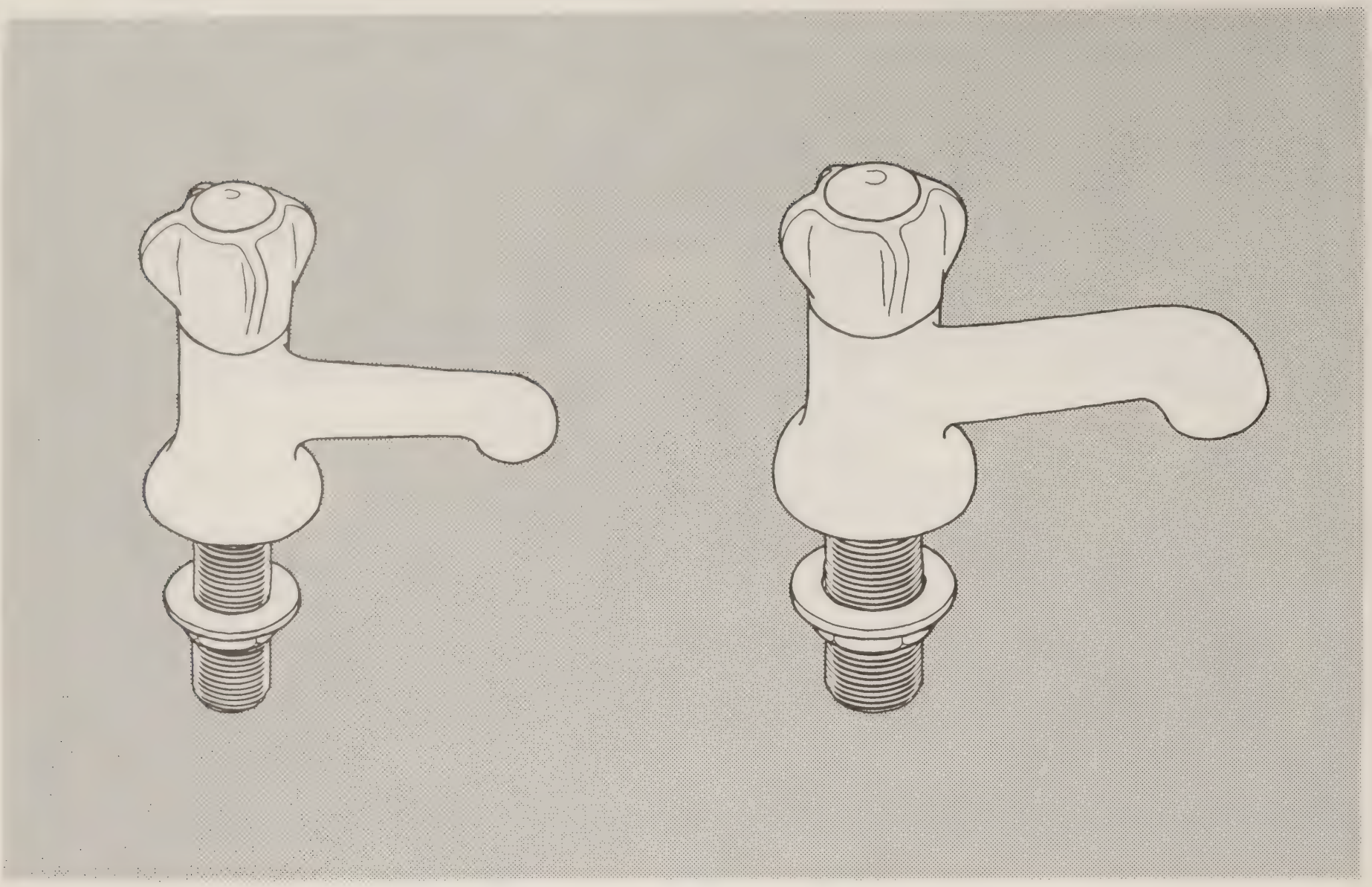

Identification

Pillar tap ½ in (12 mm)

Standards

Performance of draw-off taps
with metal bodies:- BS 5412

Description

Metal pillar tap with all metal headwork and shrouded rotating top with colour disc, open nozzle with flow straightener.
Spout/body connection clear of base.
Threaded tail with brass backnut and washer.
Inlet for copper.

Options

Nozzle with aerator.
Green disc for drinking water.
Red disc for Hot: Blue disc for cold.

Application

For use in conjunction with general basins.

Cleaning/Maintenance

Exposed surfaces smooth and easily cleaned.

TP2 ¾in (18 mm) Pillar Tap

Identification

Pillar tap ¾ in (18 mm).

Standards

Performance of draw-off taps
with metal bodies:- BS 5412

Description

Metal pillar tap with all metal headwork and shrouded rotating top with colour disc, open nozzle with flow straightener.
Spout/body connection clear of base.
Threaded tail with brass backnut and washer.
Inlet for copper.

Options

Nozzle with aerator.
Red disc for Hot: Blue disc for Cold.

Application

For use in conjunction with general baths.

Cleaning/Maintenance

Exposed surfaces smooth and easily cleaned.

TP3 ½in (12 mm) Pillar Tap High Neck

TP4 ½in (12 mm) Pillar Tap Toggle Action

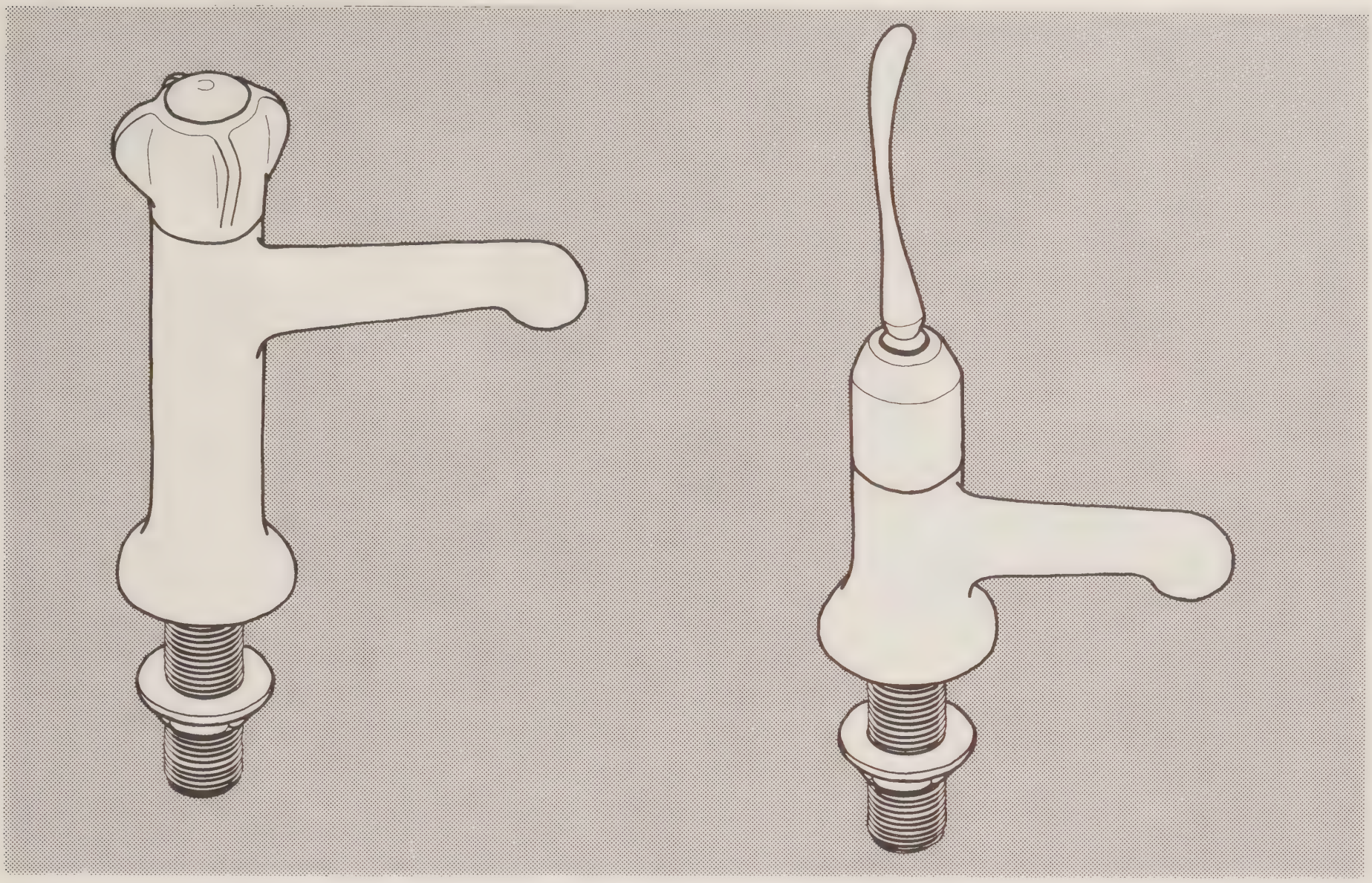

Identification

High neck pillar taps ½ in (12 mm).

Standards

Performance of draw-off taps with metal bodies:- BS 5412

Description

Metal pillar tap with all metal headwork and shrouded rotating top with colour disc, open nozzle with flow straightener.
Spout/body connection clear of base.
Threaded tail with brass backnut and washer.
Inlet for copper.

Options

Nozzle with aerator.
Green disc for drinking water.
Red disc for Hot: Blue disc for Cold.

Application

Suitable for use in conjunction with sinks and sink tops.

Cleaning/Maintenance

Exposed surfaces smooth and easily cleaned.

Identification

Pillar tap ½ in (12 mm) inlet, toggle action.

Standards

None applicable.

Description

Metal pillar tap with all metal headwork and non-concussive valve with knock on/spring off robust toggle top with identification colour, open nozzle with flow straightener.
Spout/body connection clear of base.
Threaded tail with brass backnut and washer.
Inlet for copper.

Options

Nozzle with aerators.
Red toggle for Hot: Blue toggle for Cold.
Knock-on/knock-off toggle action.

Application

For use by the manually handicapped.

Cleaning/Maintenance

Exposed surfaces smooth and easily cleaned.

TP5 ½in (12 mm) Pillar Tap Short Lever Action

TP6 Pillar Mixer Tap with Spray

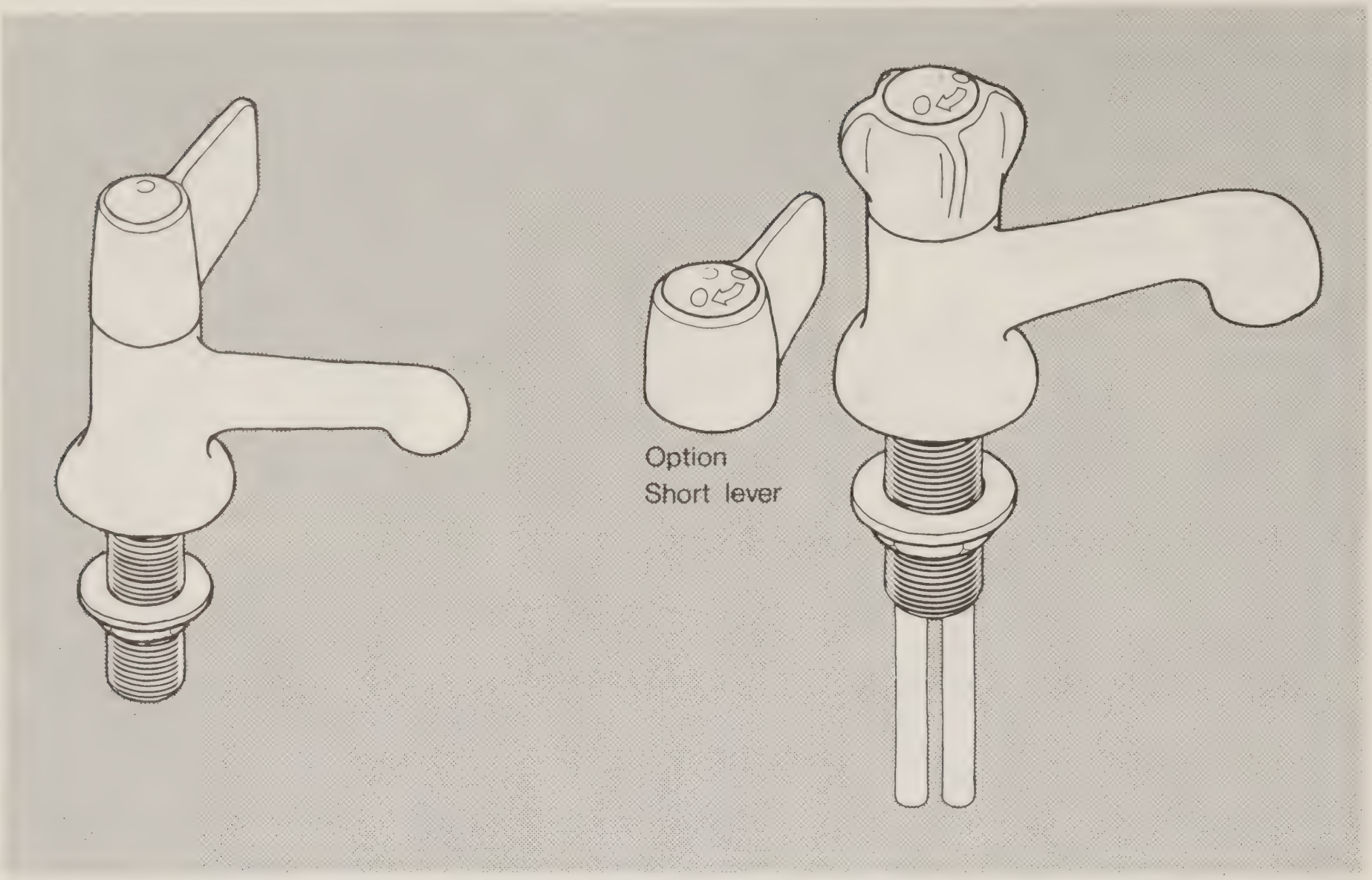

Identification

Pillar tap ½ in (12 mm) inlet, short lever action.

Standards

None applicable.

Description

Metal pillar tap with all metal headwork, shrouded quarter turn short lever action top with colour disc, and open nozzle with flow straightener.
Spout/body connection clear of base.
Threaded tail with brass backnut and washer.
Inlet for copper.

Options

Nozzle for aerators.
Red disc for Hot: Blue disc for Cold.

Application

For use by the manually handicapped.

Cleaning/Maintenance

Exposed surfaces smooth and easily cleaned.

Identification

Pillar mixer tap 2 x 8 mm.

Standards

None applicable.

Description

Metal pillar tap with all metal headwork.
Shrouded top with progressive action from cold to hot through approximately 120 degrees.
Nozzle with single flow and spray.
Spout/body connection clear of base.
Threaded tail with brass backnut and washer.
Copper inlets.

Options

Short lever operation.

Application

Suitable for hand washing: use in conjunction with small and medium general basins.
Must only be connected to tanked supplies.

Cleaning/Maintenance

Exposed surfaces smooth and easily cleaned.

TP7 Pillar Combination Tap Assembly

TB1 ½in (12 mm) Bib Tap with Hose Union

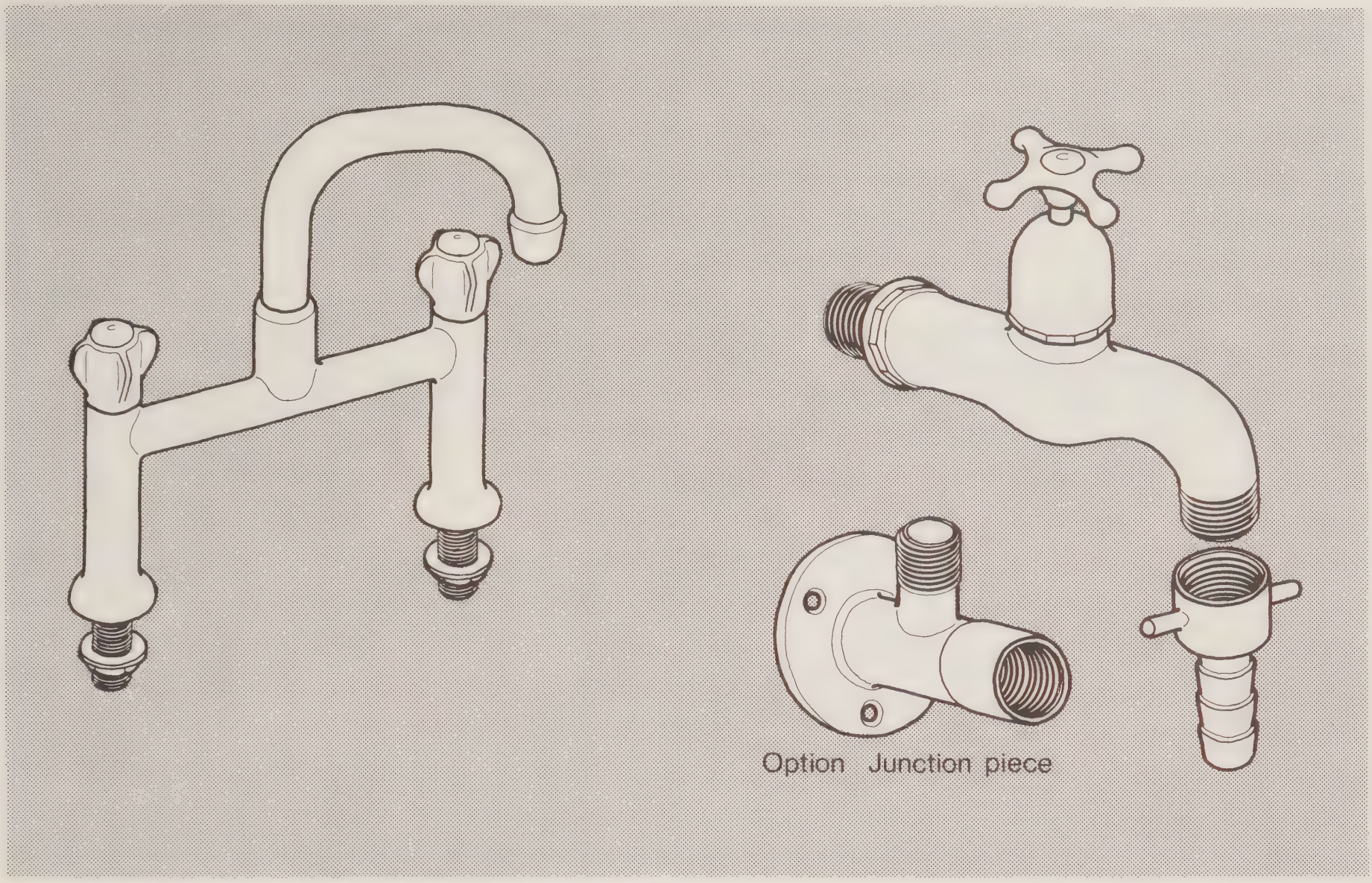

Identification

Pillar combination tap assembly 2 x ½in (12 mm) inlets with swivel nozzle.

Standards

Performance of draw-off taps with metal bodies:- BS 5412

Description

Metal pillar combination tap with all metal headwork, and shrouded rotating tops, with colour discs and swivel nozzle with annular pattern divided flow and open end.
Crossbar/bodies connection clear of base.
Threaded tails with brass backnuts and washers.
Inlets for copper.

Options

None

Application

Suitable for use in conjunction with sinks.
The divided flow unit may be connected to cold mains supply.

Cleaning/Maintenance

Exposed surfaces smooth and easily cleaned.

Identification

Bib tap ½ in (12 mm).

Standards

Draw-off taps (screw-down pattern):- BS 1010:Part 2

Description

Brass bib tap with all brass headwork, rotating top, with indicator disc, and hose union.
Threaded tail.
Inlet for copper.

Options

Junction piece with wall mounting flange.
Reinforced nylon hose (length to be specified) with jet/spray nozzle and wall hook.
C on disc for cold and H on disc for hot.

Application

Suitable for use in workshop/service areas and external locations.

Note: This fitting must not be connected to mains supply pipework unless protected against back siphonage by an anti-vacuum valve.

Cleaning/Maintenance

Exposed surfaces smooth and easily cleaned.

TB2 ½in (12 mm) Bib Tap with Hose Union

TB3 ½in (12 mm) Bib Tap

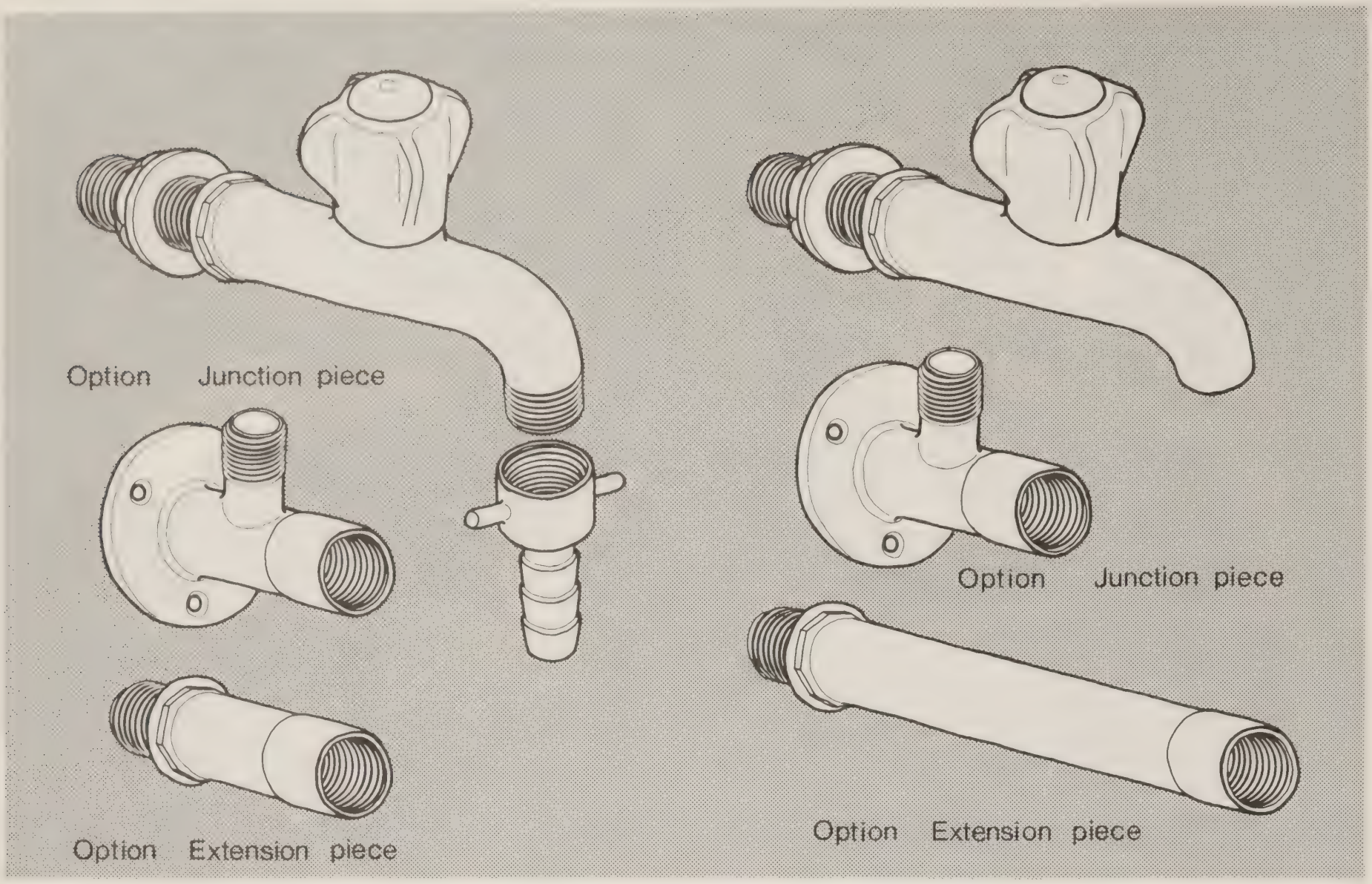

Identification

Bib tap ½ in (12 mm) inlet with hose union.

Standards

Performance of draw-off taps with metal bodies:-	BS 5412
or Draw-off taps (screwdown pattern):-	BS 1010:Part 2

Description

Metal bib with all metal headwork and shrouded rotating top, with colour disc and hose union.
Threaded tail with brass backnut and washer.
Inlet for copper.

Options

Matching extension piece to give 120 mm between wall and centre line of discharge.
Junction piece with wall mounting flange.
Reinforced nylon hose, 2m long with CP jet nozzle and wall hook.
Red disc for Hot: Blue disc for Cold.

Application

Suitable for use in domestic and service areas.

Note: This fitting must not be connected to mains supply pipework unless protected against back siphonage by an anti-vacuum valve.

Cleaning/Maintenance

Exposed surfaces smooth and easily cleaned.

Identification

Bib tap ½ in (12 mm)

Standards

Performance of draw-off taps with metal bodies:-	BS 5412
or Draw-off taps (screwdown pattern):-	BS 1010:Part 2

Description

Metal bib tap with all metal headwork, and shrouded rotating top, with colour disc open nozzle with flow straightener.
Threaded tail with brass backnut and washer.
Inlet for copper.

Options

Matching extension piece to give 200 mm between wall and centre line of discharge.
Junction piece with wall mounting flange.
Nozzle with aerator.
Green disc for drinking water.
Red disc for Hot: Blue disc for Cold.

Application

Suitable for use in conjunction with floor outlets, disposal units and sinks.

Cleaning/Maintenance

Exposed surfaces smooth and easily cleaned.

TB4 Bib
Combination Tap Assembly

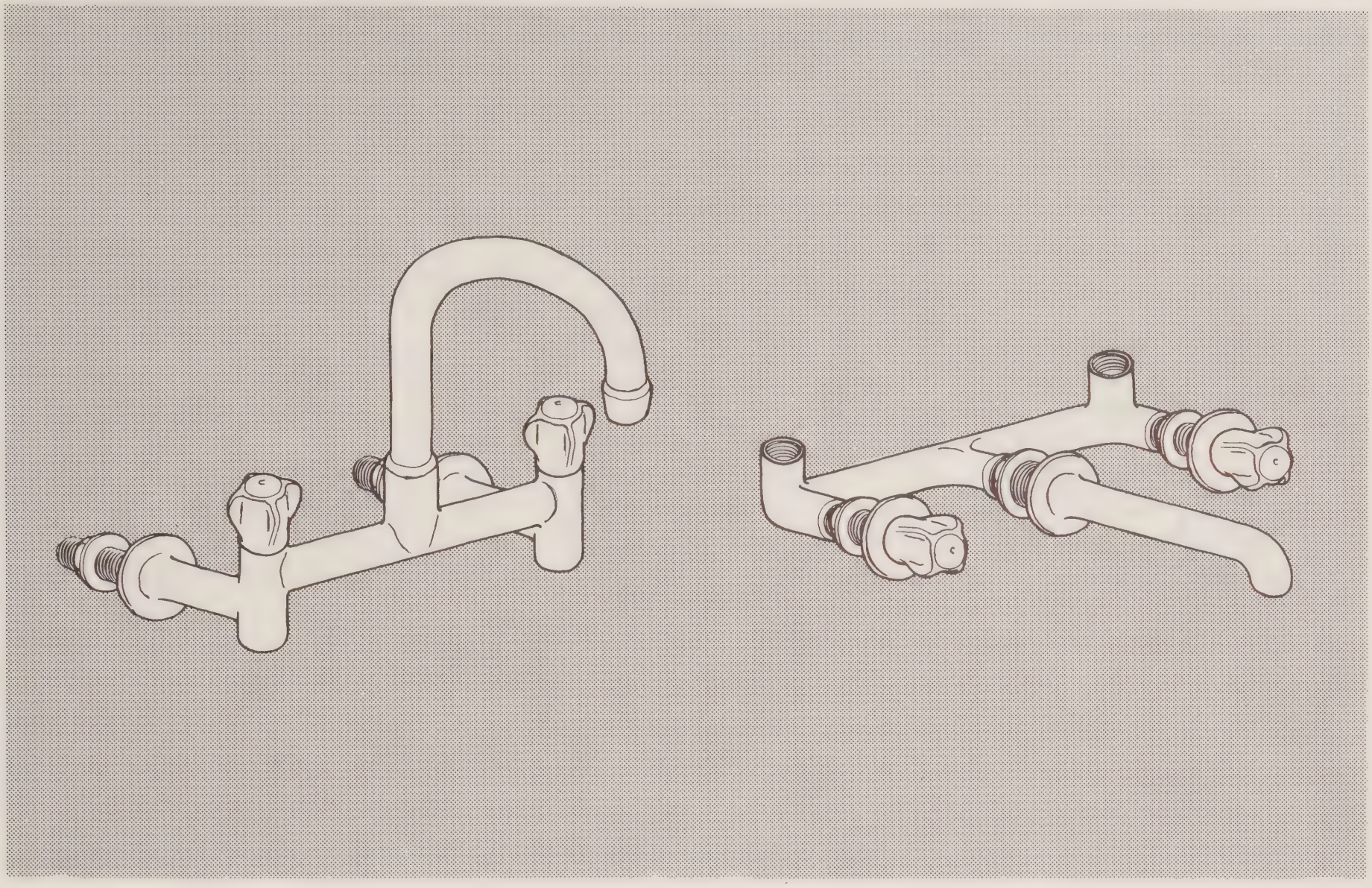

Identification

Bib combination tap assembly 2 x ½ in (12 mm) inlets with swivel nozzle.

Standards

Performance of draw-off taps with metal bodies:- BS 5412

Description

Metal bib combination tap with all metal headwork, and shrouded rotating tops with coloured discs and swivel nozzle with annular pattern divided flow and open end. Threaded tails with brass backnuts and washers. Inlets for copper.

Options

None.

Application

Suitable for use in conjunction with sinks and sink tops. The divided flow unit may be connected to cold mains supply.

Cleaning/Maintenance

Exposed surfaces smooth and easily cleaned.

TB5 Bib
Combination Tap Assembly

Identification

Bib combination tap assembly 2 x ½ in (12 mm) inlets; single flow fixed nozzle.

Standards

Performance of draw-off taps with metal bodies:- BS 5412

Description

Metal bib combination tap with all metal headwork, shrouded rotating tops with coloured discs, fixed nozzle with annular pattern divided flow and open end. Threaded tail to valves and nozzle, metal flange plates and combination pipework with threaded inlets for mounting in duct.

Options

Hot and cold valves mounted vertically to one side.

Application

Suitable for use in conjunction with disposal units, sinks and general basins.
Note: Must only be connected to tanked supplies.

Cleaning/Maintenance

Exposed surfaces smooth and easily cleaned.

TB6 Bib Combination Tap Assembly

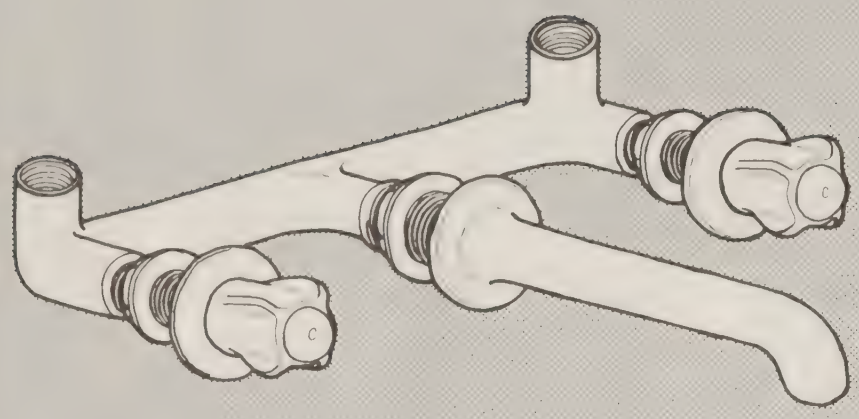

Identification

Bib combination tap assembly 2 x ¾ in (18 mm) inlets; single flow, fixed nozzle.

Standards

Performance of draw-off taps with metal bodies:- BS 5412

Description

Metal bib combination tap with all metal headwork, shrouded rotating tops with coloured discs, fixed nozzle with annular pattern divided flow and open end. Threaded tails to valves and nozzle, metal flange plates and combination pipework with threaded inlets for mounting in duct.

Options

None

Application

Suitable for use in conjunction with hospital pattern baths and general baths with no tap holes option.
Note: Must only be connected to tanked supplies.

Cleaning/Maintenance

Exposed surfaces smooth and easily cleaned.

TB7 Wall Mounted Manual Mixer Spray

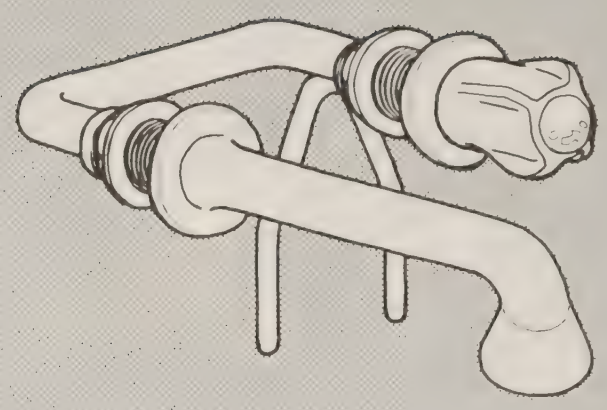

Identification

Wall mounted manual mixer valve 2 x 8mm inlets and remote single flow nozzle with spray.

Standards

None applicable.

Description

Metal mixer valve with all metal headwork, shrouded rotating top with progressive action from cold to hot, and threaded tail with brass backnut and copper inlets.
Metal fixed nozzle with single flow and spray, and threaded tail with brass backnut and washer.

Options

None

Application

Suitable for use in conjunction with general basins for hand washing.
Note: Must only be connected to tanked supplies.

Cleaning/Maintenance

Exposed surfaces smooth and easily cleaned.

TB H1 ½in (12 mm) Hospital Pattern Bib Tap

TB H2 Hospital Pattern Bib Combination Tap Assembly

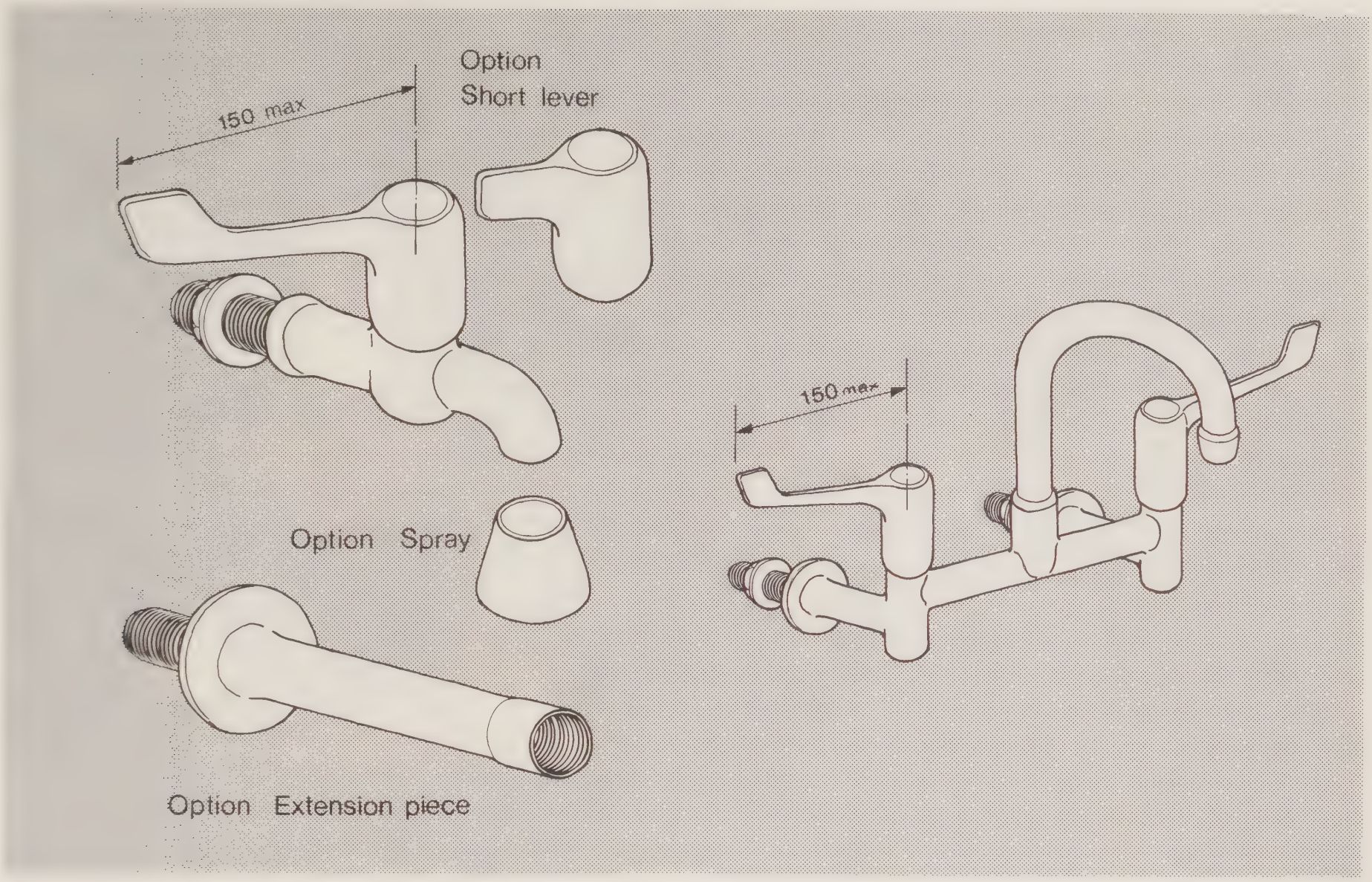

Identification

Lever action bib tap ½ in (12 mm) inlet.

Standards

None applicable.

Description

Metal bib tap with all metal headwork, shrouded quarter turn lever action top with colour disc; lever parallel to wall when tap closed.
Open nozzle with flow straightener.
Threaded tail with brass backnut and washer.
Inlet for copper.

Options

Red disc for Hot: Blue disc for Cold.
Matching extension piece to give 200 mm between wall and centre line of discharge.
Spray.
Short lever pattern.

Application

Suitable for use with sinks, hospital pattern basins and scrub-up troughs.

Cleaning/Maintenance

Exposed surfaces smooth and easily cleaned.

Identification

Lever action bib combination tap assembly 2 x ½ in (12 mm) inlets single flow swivel nozzle.

Standards

None applicable.

Description

Metal bib combination tap with all metal headworks, shrouded quarter turn lever action tops with coloured discs, lever parallel to wall when tap closed.
Swivel nozzle with annular pattern divided flow and open end, maximum reach of nozzle 200mm from wall.
Threaded tails with brass backnuts and washers.
Inlets for copper.

Options

None

Application

Suitable for use in conjunction with hospital pattern basins, plaster sinks, sink tops and sinks.
Instal so that underside of nozzle is 225mm above top of sink or basin (range is 150 to 300mm according to vessels to be filled).
Note(Must only be connected to tanked supplies.

Cleaning/Maintenance

Exposed surfaces smooth and easily cleaned.

TB H3 Hospital Pattern Bib Combination Tap Assembly

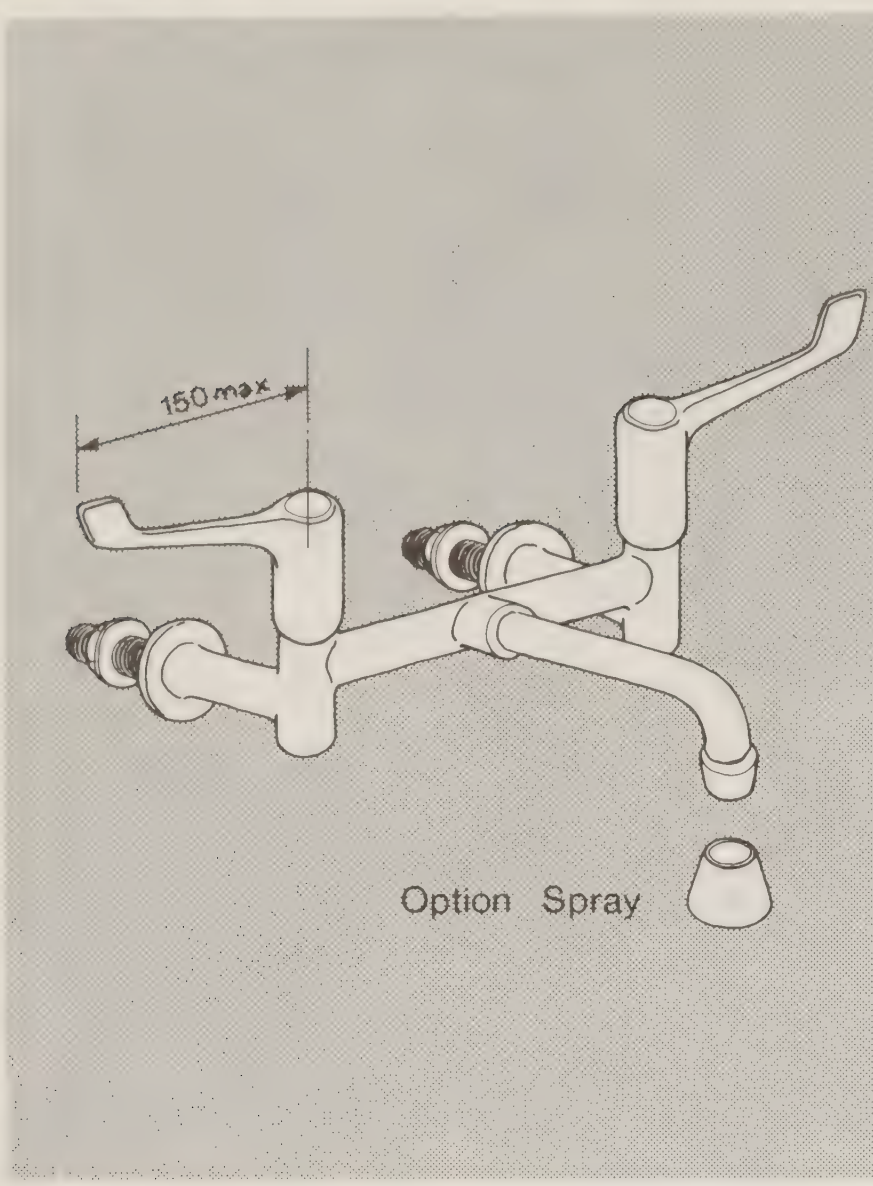

Identification

Lever action bib combination tap assembly 2 x ½ in (12 mm) inlets, single flow fixed nozzle.

Standards

None applicable.

Description

Metal bib combination tap with all metal headworks, shrouded quarter turn lever action tops with coloured discs, lever parallel to wall when tap closed.
Fixed nozzle with annular pattern divided flow and open end, maximum reach of nozzle 200mm from wall.
Threaded tails with brass backnuts and washers.
Inlets for copper.

Options

Spray.

Application

Suitable for use in conjunction with disposal units and scrub-up troughs.
Note: Must only be connected to tanked supplies.

Cleaning/Maintenance

Exposed surfaces smooth and easily cleaned.

TB H4 Hospital Pattern Bib Thermostatic Mixer

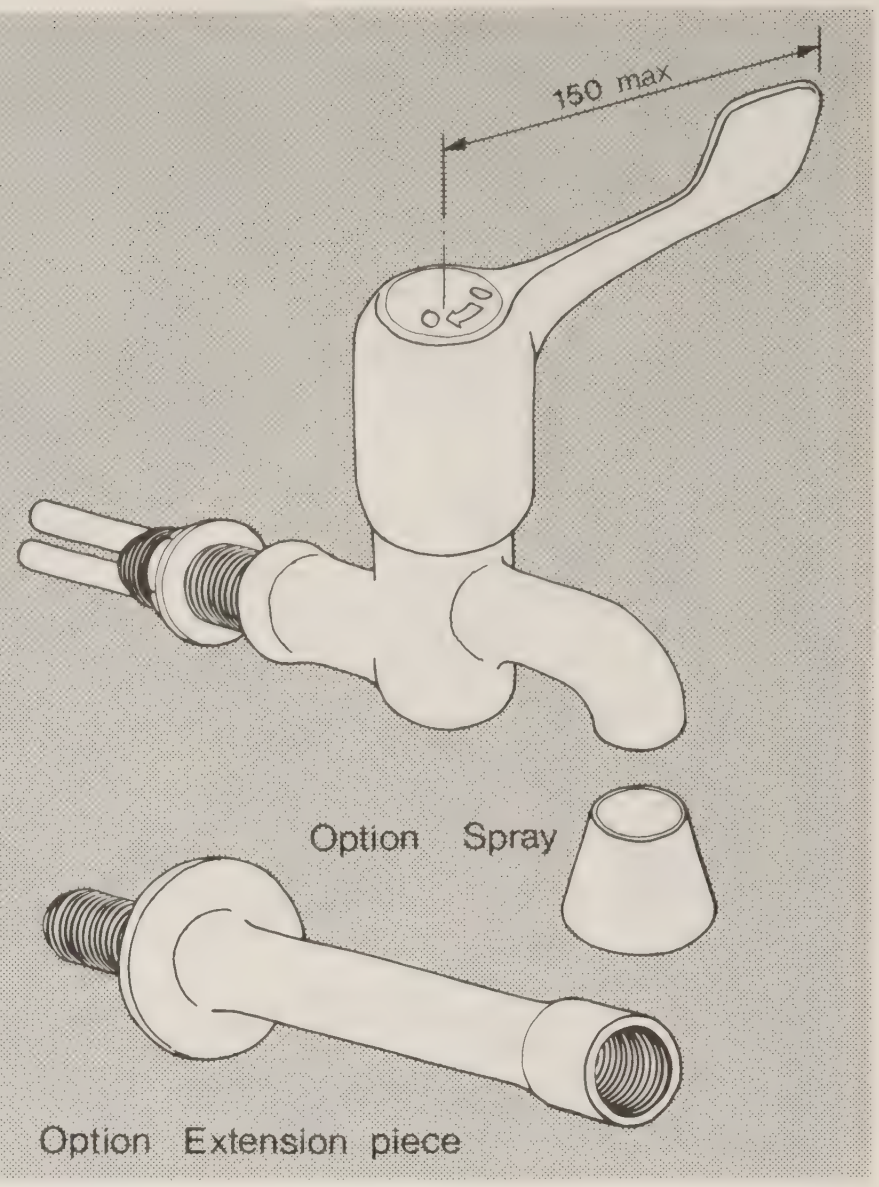

Identification

Thermostatic lever action bib mixer tap 2 x 8 mm inlets.

Standards

None applicable.

Description

Metal thermostatic mixer valve with shrouded quarter turn lever action top with progressive action from cold to hot; lever parallel to wall when tap closed.
Nozzle with single flow and flow straightener.
Threaded tail with brass backnut and washer.
Copper inlets.

Options

Spray.
Matching extension piece to give 200 mm between wall and centre line of discharge.

Application

Suitable for use in conjunction with general and hospital pattern basins and scrub-up troughs.
Note: Must only be connected to tanked supplies.

Cleaning/Maintenance

Exposed surfaces smooth and easily cleaned.

TB H5 Hospital Pattern Bib Manual Mixer

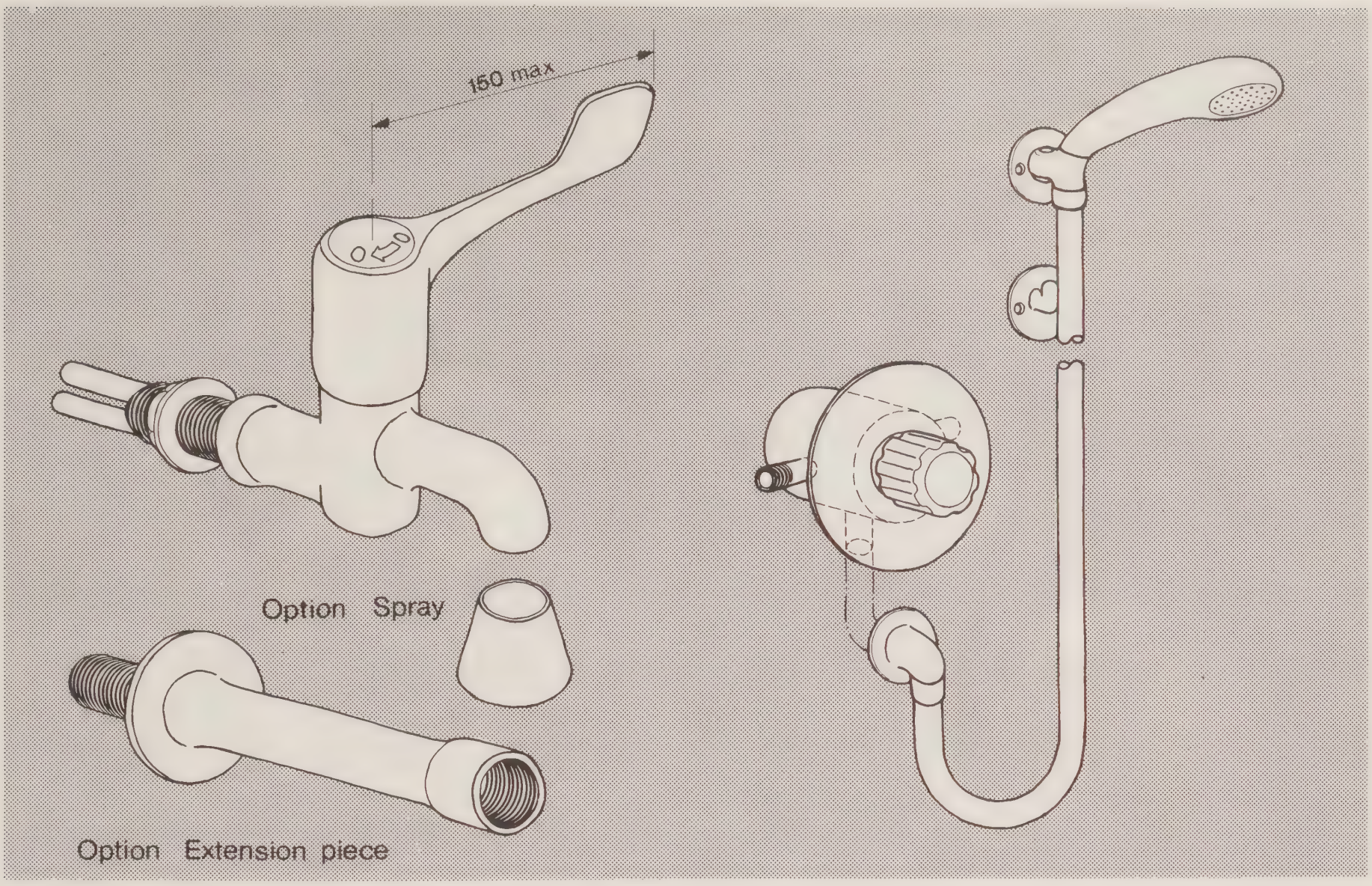

Identification

Manual lever action bib mixer tap 2 x 8 mm inlets.

Standards

None applicable.

Description

Metal manual mixer valve with shrouded quarter turn lever action top with progressive action from cold to hot; lever parallel to wall when tap closed.
Nozzle with single flow and flow straightener.
Threaded tail with brass backnut and washer.
Copper inlets.

Options

Spray.
Matching extension piece to give 200 mm between wall and centre line of discharge.

Application

Suitable for use in conjunction with general and hospital pattern basins and scrub-up troughs.
Note: Must only be connected to tanked supplies.

Cleaning/Maintenance

Exposed surfaces smooth and easily cleaned.

MM1 Wall Mounted Manual Mixer Shower

Identification

Wall mounted manual mixer valve with 2 x 12/15 mm inlets and remote single flow flexible hose with handset spray.

Standards

Manual mixer valves:-	BS 1415:Part 1
Specification for shower heads:-	BS 6340:Part 4

Description

Metal mixer valve with shrouded rotating top(s) with control of temperature and volume.
Metal outlet with smooth reinforced nylon hose with single flow plastics handset spray with wall attachments.
Threaded tails to valve and outlet with brass backnut and washer
Copper inlets.

Options

Wall mounted bar with adjustable holder for handset.

Application

Suitable for use in conjunction with staff baths and shower receivers.
Note: Must only be connected to tanked supplies.

Cleaning/Maintenance

Exposed surfaces smooth and easily cleaned.

MM2 Wall Mounted Manual Mixer Shower

TM1 Wall Mounted Thermostatic Mixer Shower

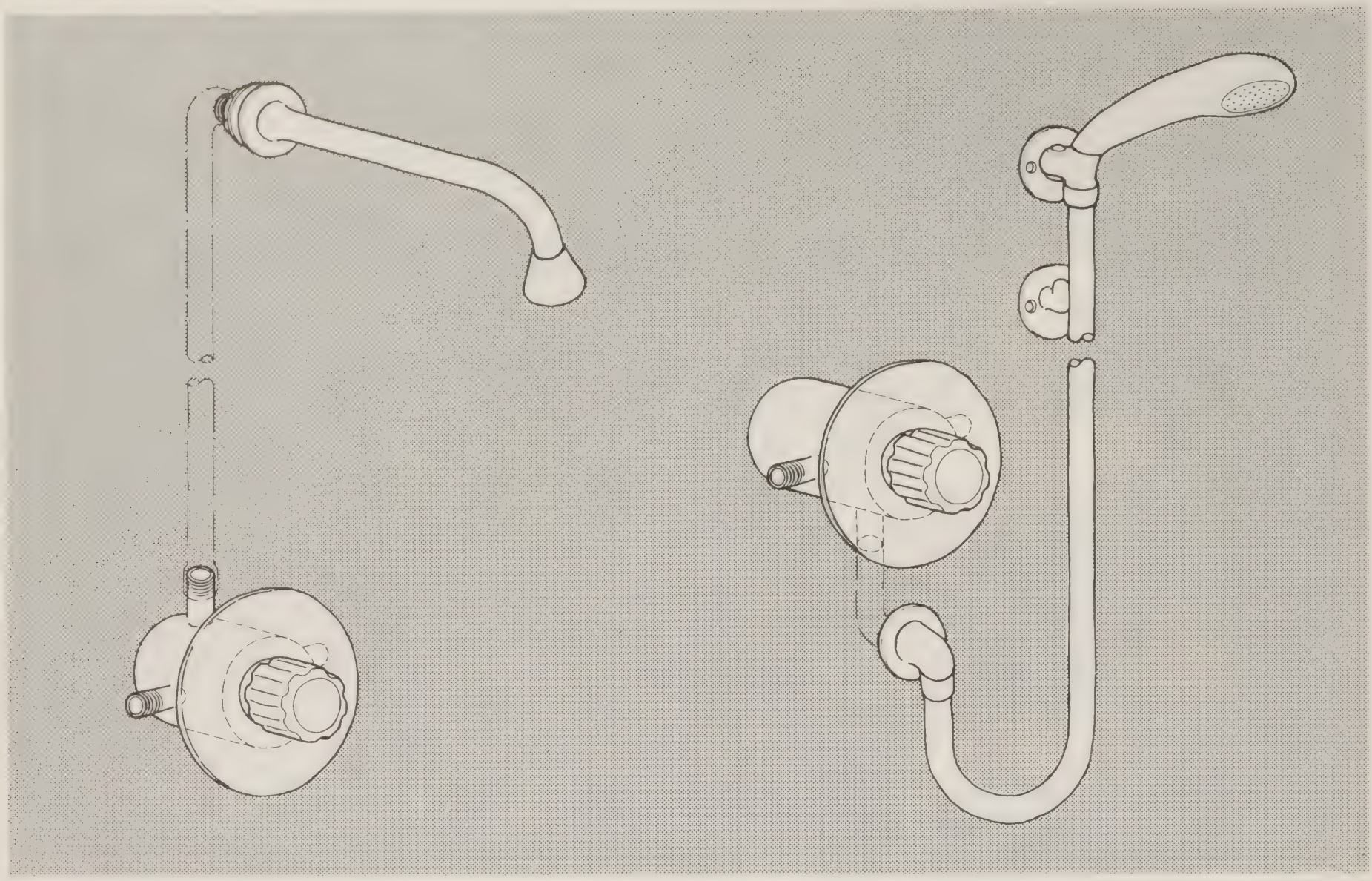

Identification

Wall mounted manual mixer valve with 2 x 12/15 mm inlets and remote single flow fixed outlet with adjustable spray and nozzle.

Standards

Manual mixer valves:-	BS 1415:Part 1
Specification for shower heads:-	BS 6340:Part 4

Description

Metal mixer valve with shrouded rotating top(s) with control of temperature and volume.
Metal nozzle with single flow directionally adjustable spray.
Threaded tails to valve and nozzle with brass backnut and washer.
Copper inlets.
Connecting pipework not included.

Options

None.

Application

Suitable for use in conjunction with staff baths and shower receivers.
Note: Must only be connected to tanked supplies.

Cleaning/Maintenance

Exposed surfaces smooth and easily cleaned.

Identification

Wall mounted thermostatic mixer valve with 2 x 12/15 mm inlets with remote single flow flexible hose and handset spray.

Standards

Thermostatic mixer valves:-	BS 1415:Part 2
Specification for shower heads:-	BS 6340:Part 4

Description

Metal thermostatic mixer valve with fail safe temperature control and shrouded rotating top(s) with control of temperature and volume.
Metal outlet with smooth reinforced nylon hose (specify length for assisted baths, bidets, and hair washing, with single flow plastics handset spray with wall attachments.
Threaded tails to valve and socket with brass backnut and washer.
Copper inlets.

Options

Wall mounted bar with adjustable holder for handset.

Application

Suitable for use in conjunction with hospital pattern bidets, baths, shower receivers and hair washing basins.
For use with bidets, hand set should have narrow spray pattern. Wall attachment should be mounted centrally over bidet.
Note: Must only be connected to tanked supplies.

Cleaning/Maintenance

Exposed surfaces smooth and easily cleaned.

WT1 1¼in (32 mm) Flush Grated Waste

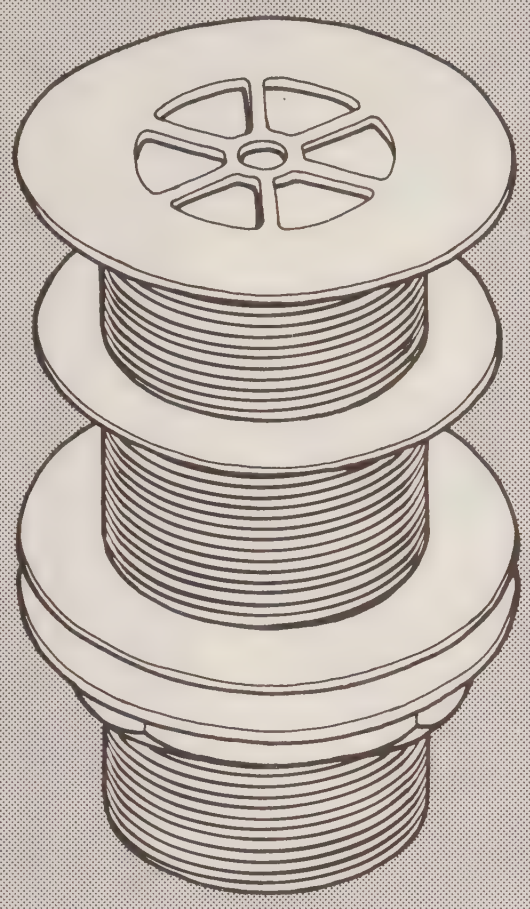

Identification

1¼ in (32 mm) unslotted flush grated waste CP on brass.

Standards

Wastes:- BS 3380:Part 1

Description

All metal long waste with flush grated top: no exposed sharp arrises.
Threaded tail with brass backnut and gaskets.

Options

None.

Application

For use with basins (including hospital pattern) and hospital pattern bidets.

Cleaning/Maintenance

Exposed surfaces smooth and easily cleaned.

WT2 1½in (38 mm) Flush Grated Waste

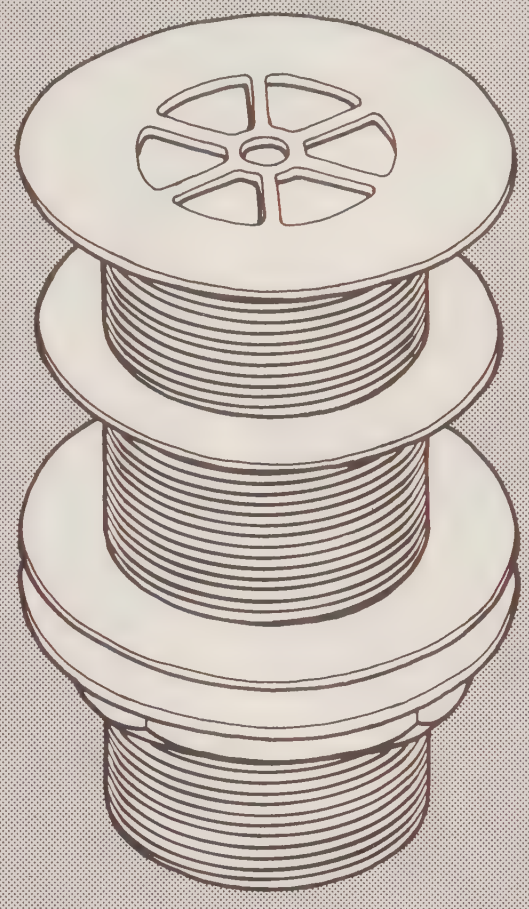

Identification

1½ in (38 mm) unslotted flush grated waste CP on brass.

Standards

Wastes:- BS 3380:Part 1

Description

All metal long waste with flush grated top: no exposed sharp arrises.
Threaded tail with brass backnut and gaskets.

Options

Polished brass (50 mm short waste).
Removable grate.

Application

For use with bottom outlet scrub-up troughs.
Use polished brass option with urinal bowls.
Use removable grate option with shower receivers.

Cleaning/Maintenance

Exposed surfaces smooth and easily cleaned.

WT3 1¼in (32 mm) Waste with Plug and Chain

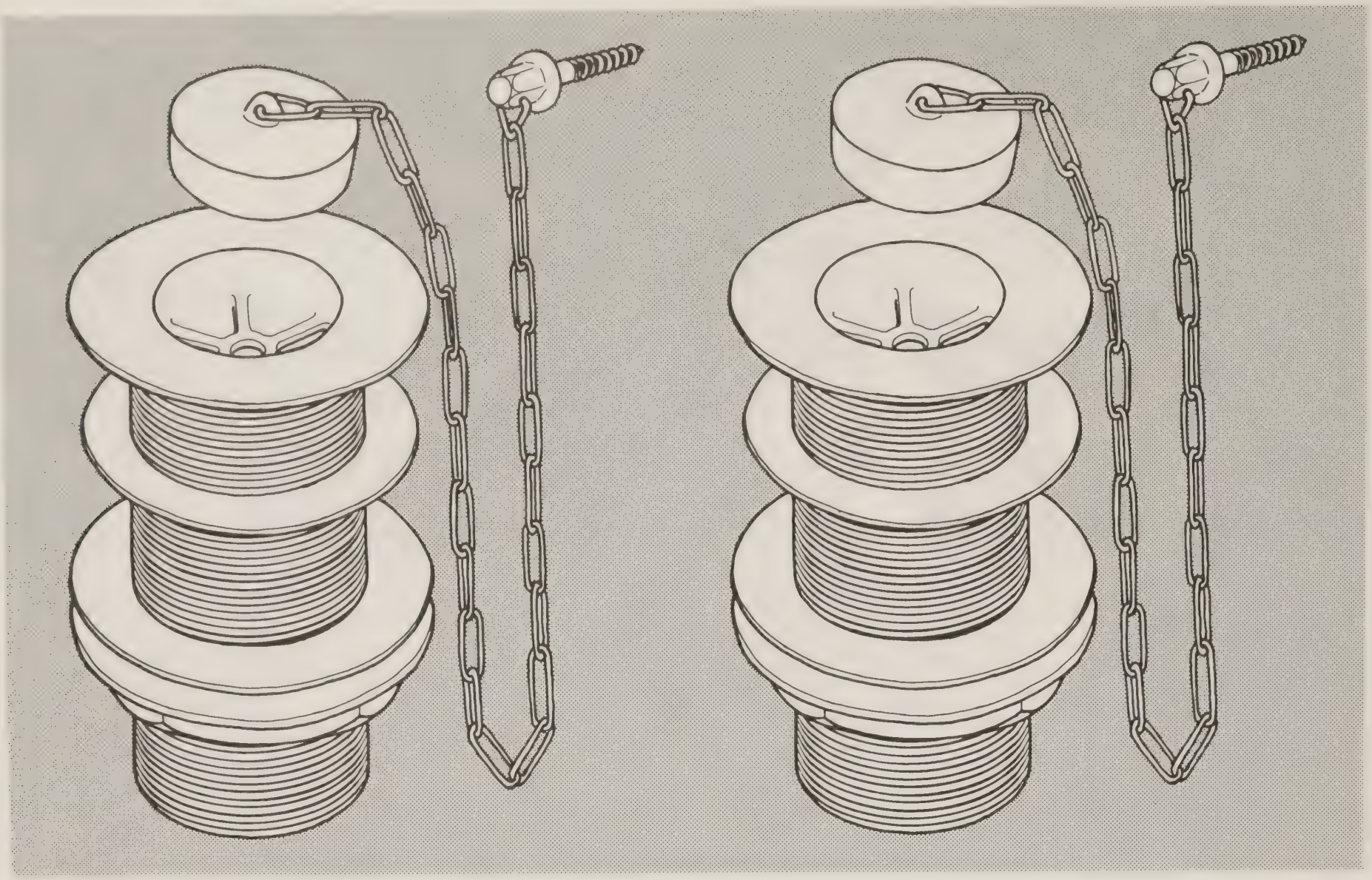

Identification

1¼ in (32 mm) unslotted recessed grated waste, CP on brass, plug with CP link chain and screw stay.

Standards

Wastes:- BS 3380:Part 1

Description

All metal long waste with recessed grate: no exposed sharp arrises.
Plug with metal link chain and screw stay.
Threaded tail with brass backnut and gaskets.

Options

None.

Application

For use with basins.

Cleaning/Maintenance

Exposed surfaces smooth and easily cleaned.

WT4 1½in (38 mm) Waste with Plug and Chain

Identification

1½ in (38 mm) unslotted recessed grated waste, CP on brass, plug with CP chain and screw stay.

Standards

Wastes:- BS 3380:Part 1

Description

All metal long waste with recessed grate: no exposed sharp arrises.
Plug with metal link chain and screw stay.
Threaded tail with brass backnut and gaskets.

Options

Slotted.

Application

For use with sinks, sink tops and baths.
Use slotted option for domestic baths.

Cleaning/Maintenance

Exposed surfaces smooth and easily cleaned.

TR 1/M 1¼in (32 mm) Bottle Trap

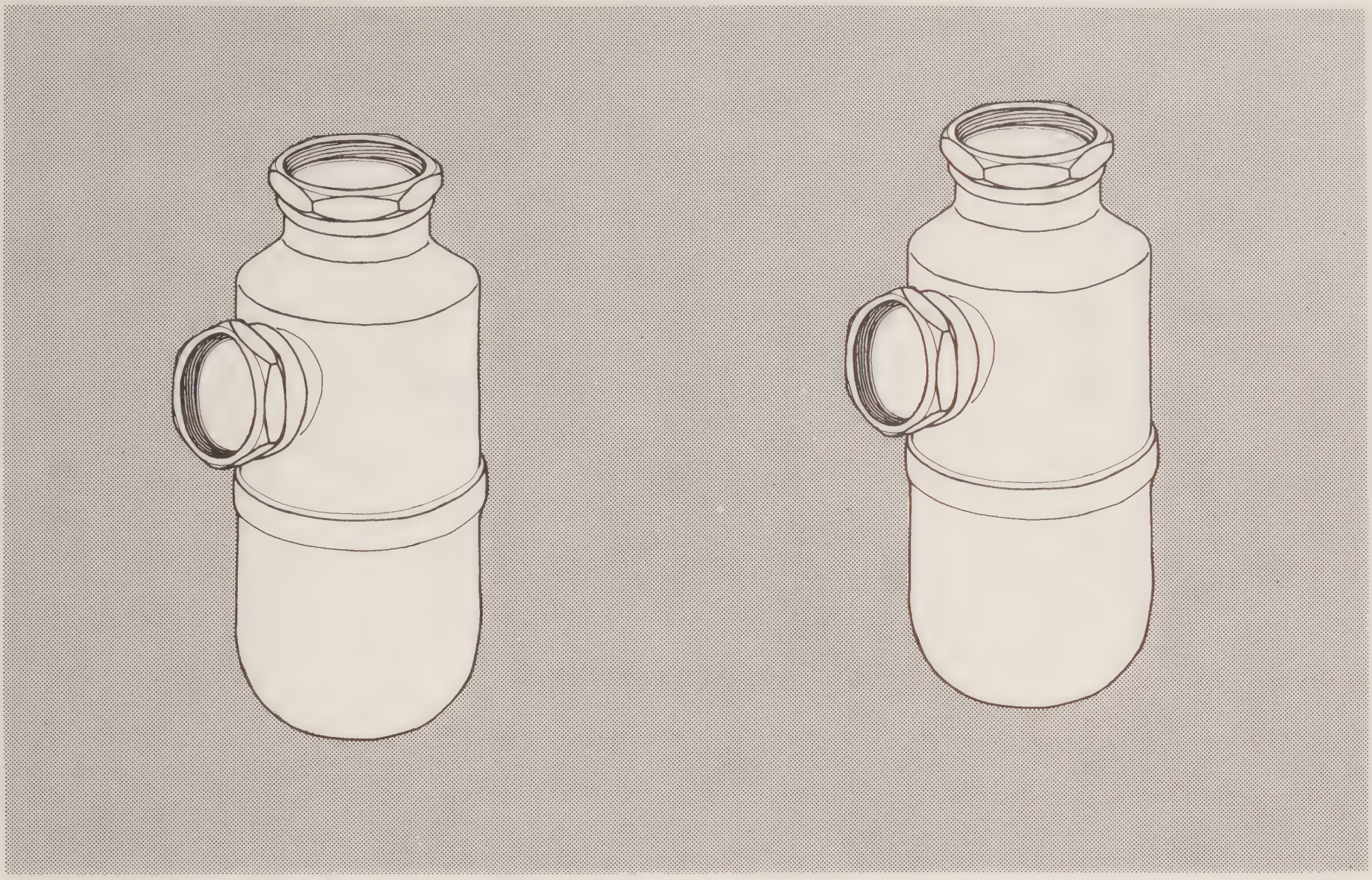

Identification

1¼ in (32 mm) metal bottle trap.

Standards

Generally as
Copper and copper alloy traps:- BS 1184

Description

'P' outlet 76 mm seal brass bottle trap with removable sump, and threaded outlet for connection to copper or plastics pipework.
Finished CP.

Options

Self coloured.

Application

For use when exposed.
Use self coloured option when concealed.

Cleaning/Maintenance

Exposed surfaces smooth and easily cleaned.

TR 2/M 1½in (38 mm) Bottle Trap

Identification

1½ in (38 mm) metal bottle trap.

Standards

Generally as
Copper and copper alloy traps:- BS 1184

Description

'P' outlet 76 mm seal brass bottle trap with removable sump, and threaded outlet for connection to copper or plastics pipework.
Finished CP.

Options

Self coloured.

Application

For use when exposed.
Use self coloured option when concealed.

Cleaning/Maintenance

Exposed surfaces smooth and easily cleaned.

TR R1/M 1¼in (32 mm) Resealing Bottle Trap

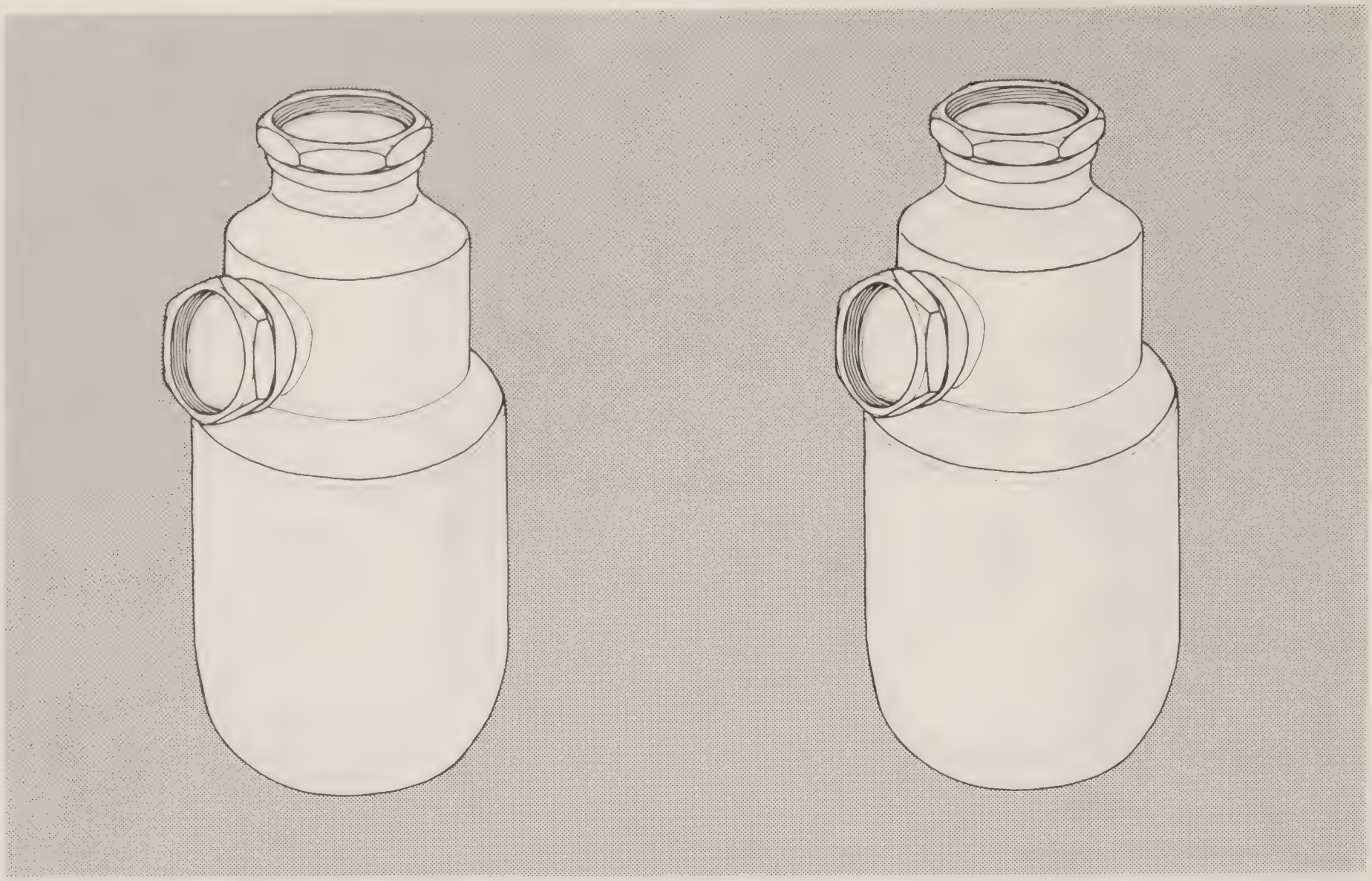

Identification

1¼ in (32 mm) metal resealing bottle trap.

Standards

Generally as
Copper and copper alloy traps:- BS 1184

Description

'P' outlet 76 mm seal brass bottle trap with removable sump, and threaded outlet for connection to copper or plastics pipework and annular pattern resealing device. Finished CP.

Options

Self coloured.

Application

For use when exposed on fittings connected to single stack plumbing.
Use self coloured option when concealed.

Cleaning/Maintenance

Exposed surfaces smooth and easily cleaned.

TR R2/M 1½in (38 mm) Resealing Bottle Trap

Identification

1½ in (38 mm) metal resealing bottle trap.

Standards

Generally as
Copper and copper alloy traps:- BS 1184

Description

'P' outlet 76 mm seal brass bottle trap with removable sump, and threaded outlet for connection to copper or plastics pipework and annular pattern resealing device. Finished CP.

Options

Self coloured.

Application

For use when exposed on fittings connected to single stack plumbing.
Use self coloured option when concealed.

Cleaning/Maintenance

Exposed surfaces smooth and easily cleaned.

TR 1/P 1¼in (32 mm) Bottle Trap

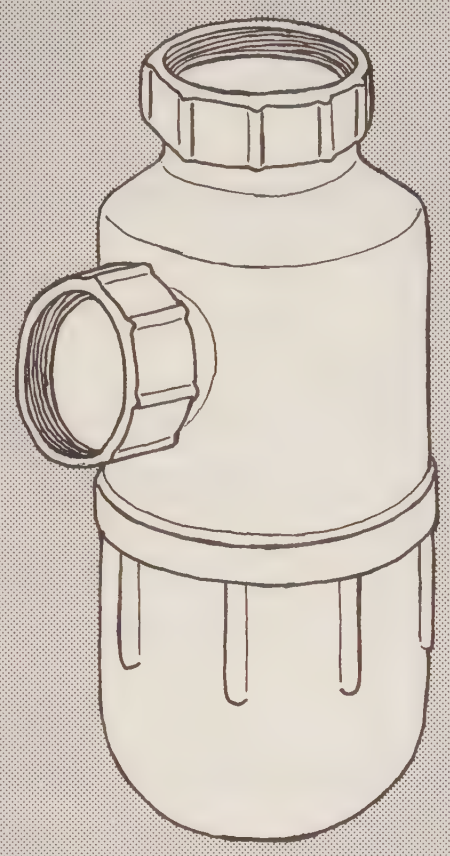

Identification

1¼ in (32 mm) plastics bottle trap.

Standards

Generally as
plastics waste traps:- BS 3943

Description

'P' outlet 76 mm seal plastics bottle trap with removable sump, and threaded outlet for connection to copper or plastics pipework.
Finished CP.

Options

Self coloured.

Application

For use when exposed.
Use self coloured option when concealed.

Cleaning/Maintenance

Exposed surfaces smooth and easily cleaned.

TR 2/P 1½in (38 mm) Bottle Trap

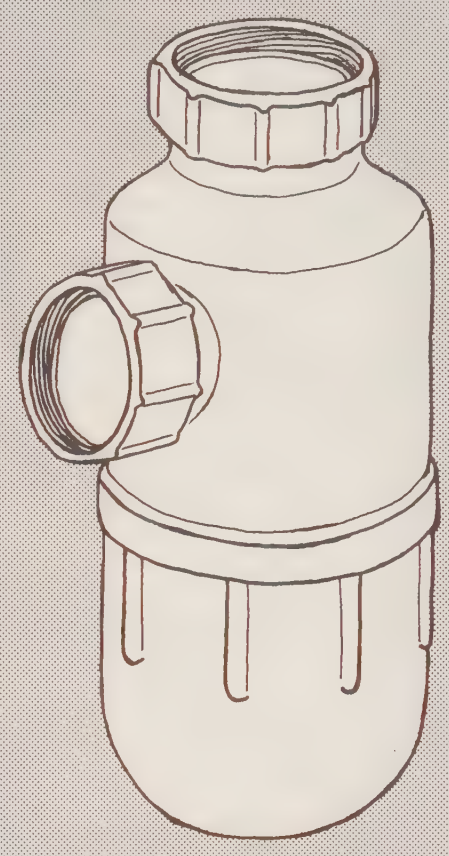

Identification

1½ in (38 mm) plastics bottle trap.

Standards

Generally as
plastics waste traps:- BS 3943

Description

'P' outlet 76 mm seal plastics bottle trap with removable sump, and threaded outlet for connection to copper or plastics pipework.
Finished CP.

Options

Self coloured.

Application

For use when exposed.
Use self coloured option when concealed.

Cleaning/Maintenance

Exposed surfaces smooth and easily cleaned.

TR R1/P 1¼in (32 mm) Resealing Bottle Trap

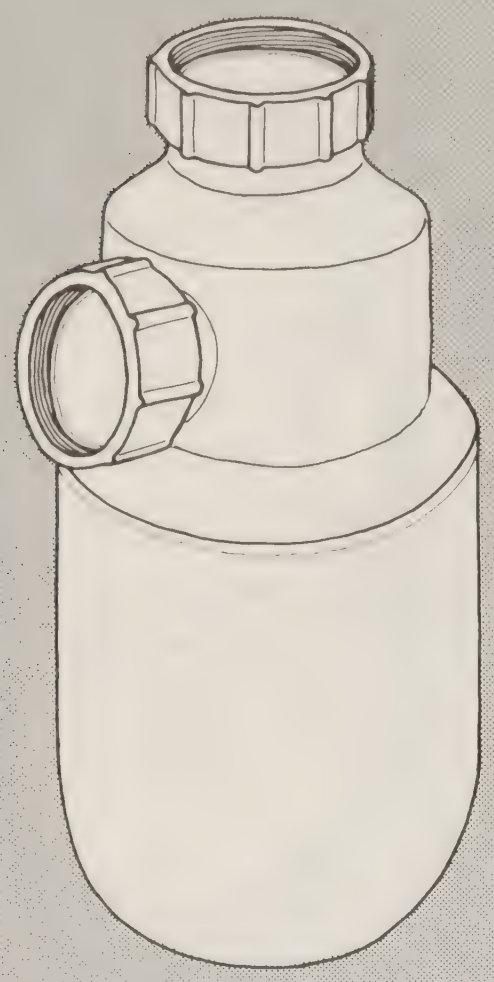

Identification

1¼ in (32 mm) plastics resealing bottle trap.

Standards

Generally as
plastics waste traps:- BS 3943

Description

'P' outlet 76 mm seal plastics bottle trap with removable sump, and threaded outlet for connection to copper or plastics pipework and annular pattern resealing device. Finished CP.

Options

Self coloured.

Application

For use when exposed on fittings connected to single stack plumbing.
Use self coloured option when concealed.

Cleaning/Maintenance

Exposed surfaces smooth and easily cleaned.

TR R2/P 1½in (38 mm) Resealing Bottle Trap

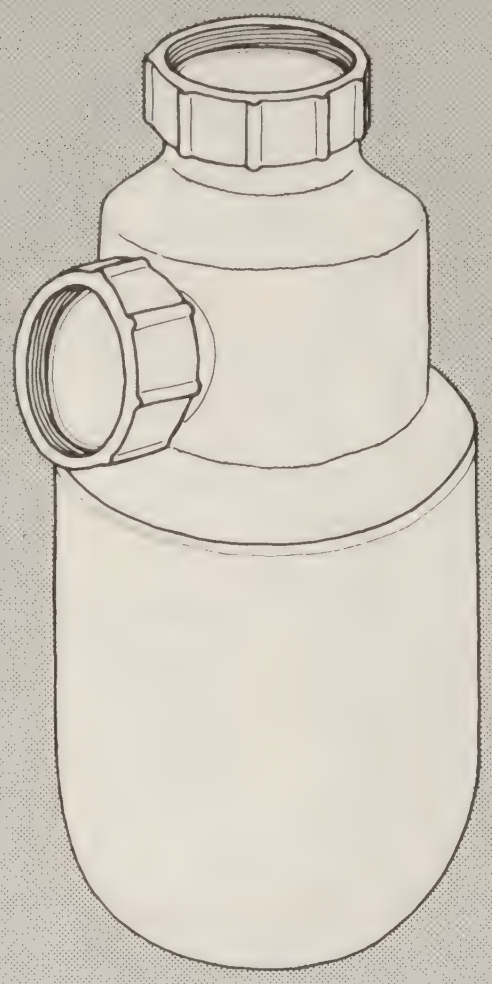

Identification

1½ in (38 mm) plastics resealing bottle trap.

Standards

Generally as
plastics waste traps:- BS 3943

Description

'P' outlet 76 mm seal plastics bottle trap with removable sump, and threaded outlet for connection to copper or plastics pipework and annular pattern resealing device. Finished CP.

Options

Self coloured.

Application

For use when exposed on fittings connected to single stack plumbing.
Use self coloured option when concealed.

Cleaning/Maintenance

Exposed surfaces smooth and easily cleaned.

3.3 Assembly Data Sheets

The Disposal Unit Assemblies	Page Number
Disposal Unit Assemblies for the disposal of liquid and solid waste in connection with medical/nursing procedures	50
Disposal Unit Assemblies for the disposal of liquid and solid waste by domestic services staff	51
Basin Assemblies	
Basin Assemblies for use in connection with medical/nursing procedures	52
Basin Assemblies for use in connection with personal washing (face, forearms and hands etc)	53
Basin Assemblies for use in connection with personal washing by seated users	54
Basin Assemblies for hand rinsing only	55
Bath Assemblies	
Bath Assembly for use in connection with assisted bathing by nursing staff	56
Bath Assemblies for use in connection with personal bathing by patients and/or staff	57
Bidet Assembly	
Bidet Assembly for use in connection with medical/nursing procedures	58
Plaster Sink Assembly	
Plaster Sink Assembly for use in connection with plaster preparation	59
Scrub-up Trough Assemblies	
Scrub-up Trough Assemblies for use in connection with Surgical washing of forearms and hands	60
Sink and Sink Top Assemblies	
Sink and Sink Top Assemblies for use in connection with nursing procedures	61
Sink and Sink Top Assemblies for use in connection with domestic services procedures	62

Disposal Unit Assemblies for the disposal of liquid and solid waste in connection with medical/nursing procedures

The essential requirements are:—

1. Hospital Pattern Disposal Unit (including cistern).
2. Hospital Pattern (lever action) taps to avoid contamination – located over sink (or hopper if no sink).
3. Separate manual control of hot and cold water.
4. Combined or separate nozzles with flow straightener.
5. Connecting to concealed services.

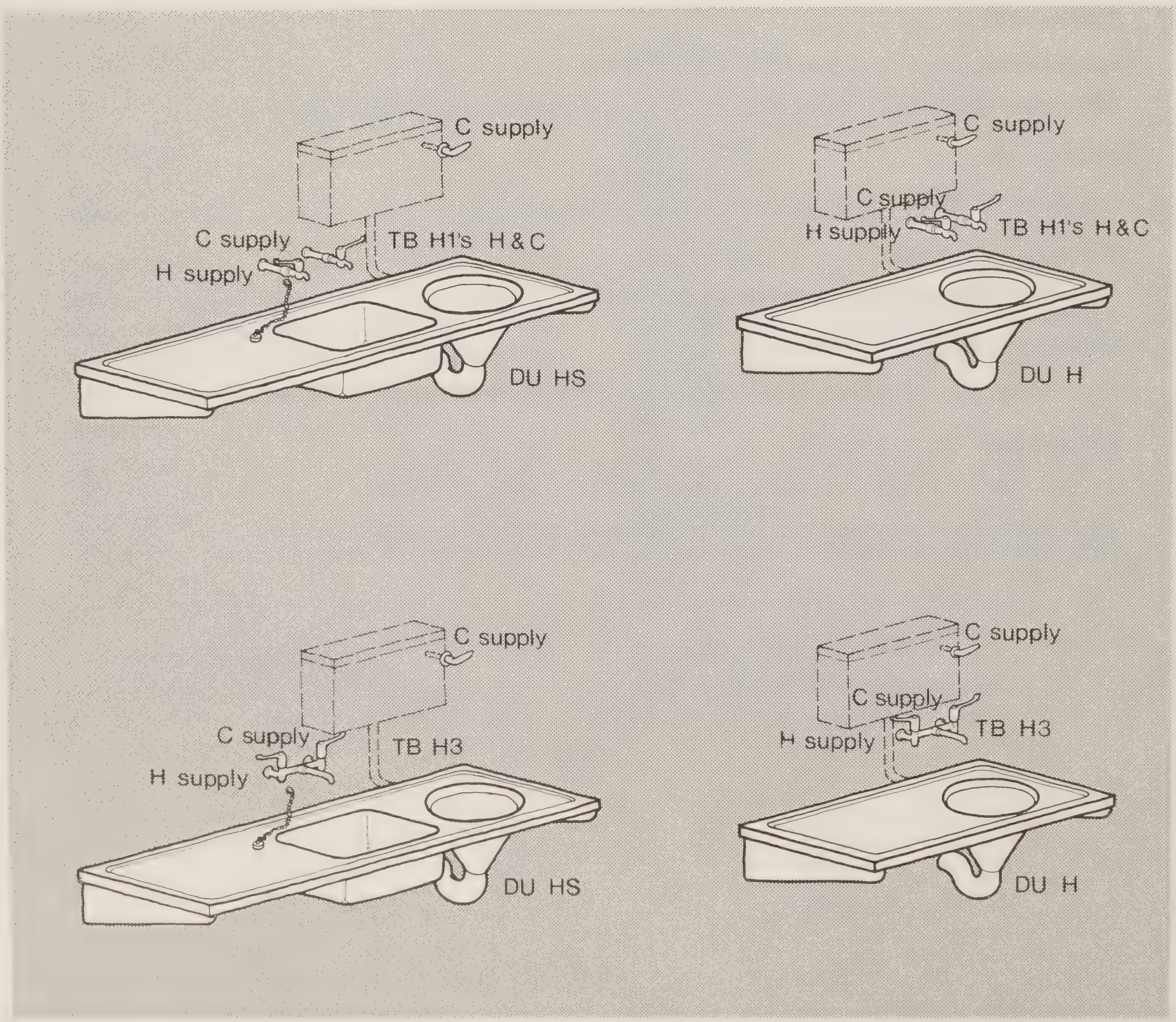

Disposal Unit Assemblies for the disposal of liquid and solid waste by domestic services staff

The essential requirements are:—

1. General Disposal Unit (including cistern).
2. Separate manual control of hot and cold water.
3. Combined or separate nozzles with flow straightener.
4. Rotating action taps.

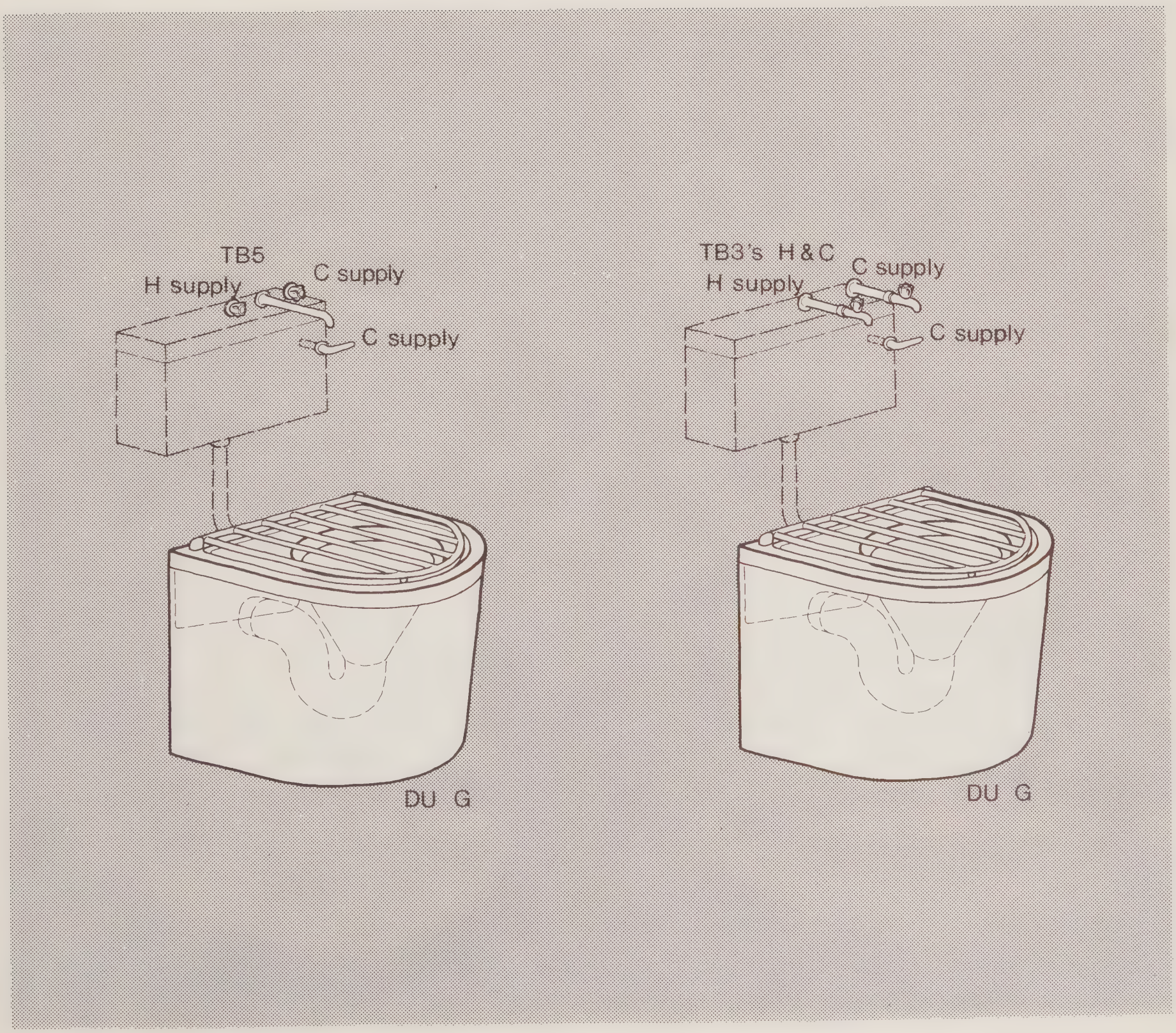

Basin Assemblies for use in connection with Medical/Nursing procedures

The essential requirements are:—

1. Hospital Pattern Basin.
2. Washing under running water with flush operated waste (therefore no plug).
3. Hospital Pattern (lever action) tap(s) to avoid contamination
4. Single spout (may be spray or flow straightener nozzle, fixed or swivel).
5. Water temperature may be controlled thermostatically or manually.
6. Connecting to concealed services.

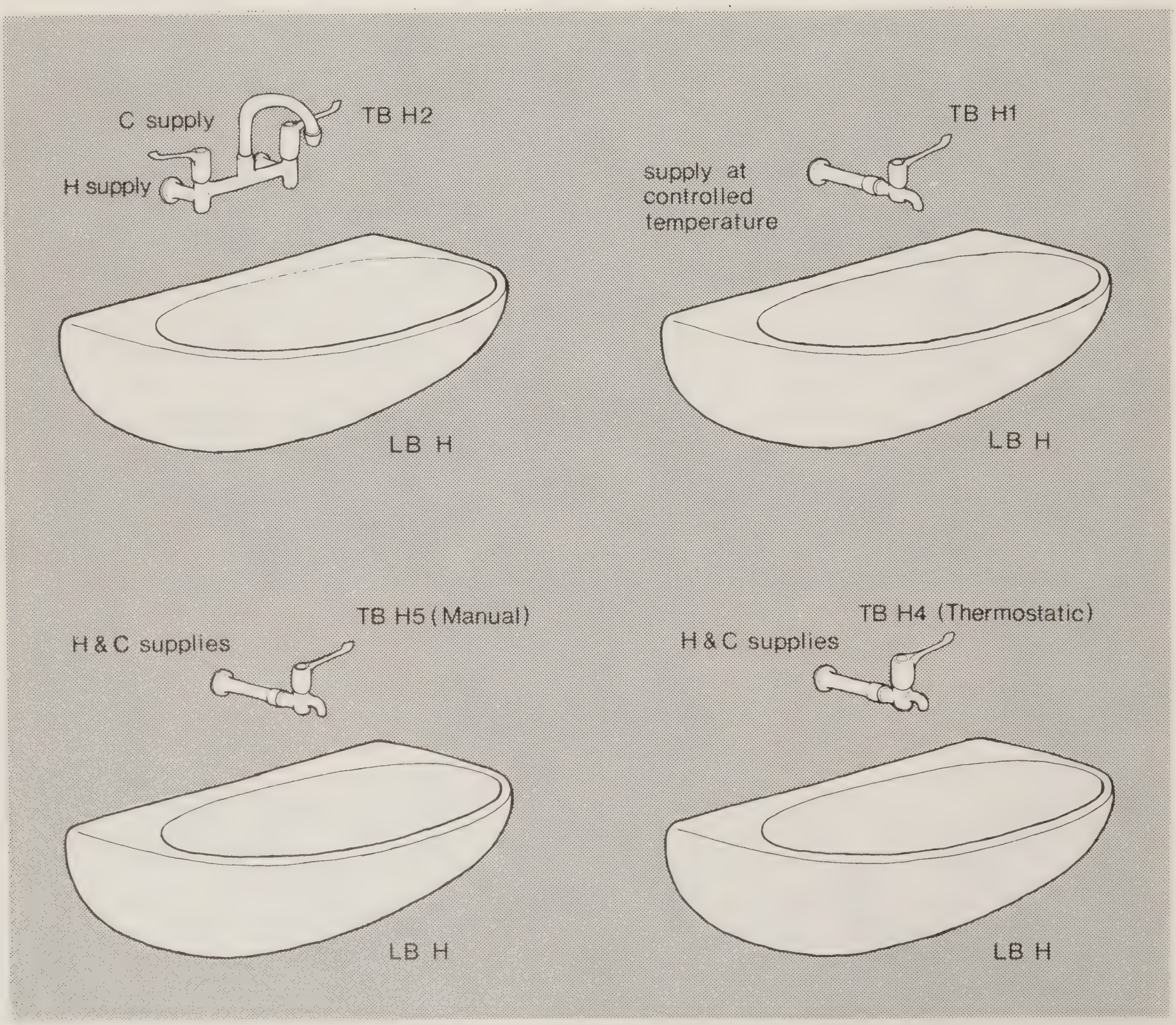

Basin Assemblies for use in connection with personal washing (face, forearms and hands etc)

The essential requirements are:—

1. General Basin
2. Washing in a reservoir of water (therefore a basin with plug).
3. Separate manual control of hot and cold water (except for hair washing assembly).
4. Combined or separate nozzle with flow straightener.
5. Rotating action taps -

   (Note: when intended for use by handicapped users toggle action or lever action taps may be preferred and basin should be set at special height: see basin assembly sheet for seated users).

6. All assemblies shown below are suitable with medium and large General Basins, except that for hair washing use only the large General Basin is suitable (and no plug is required).

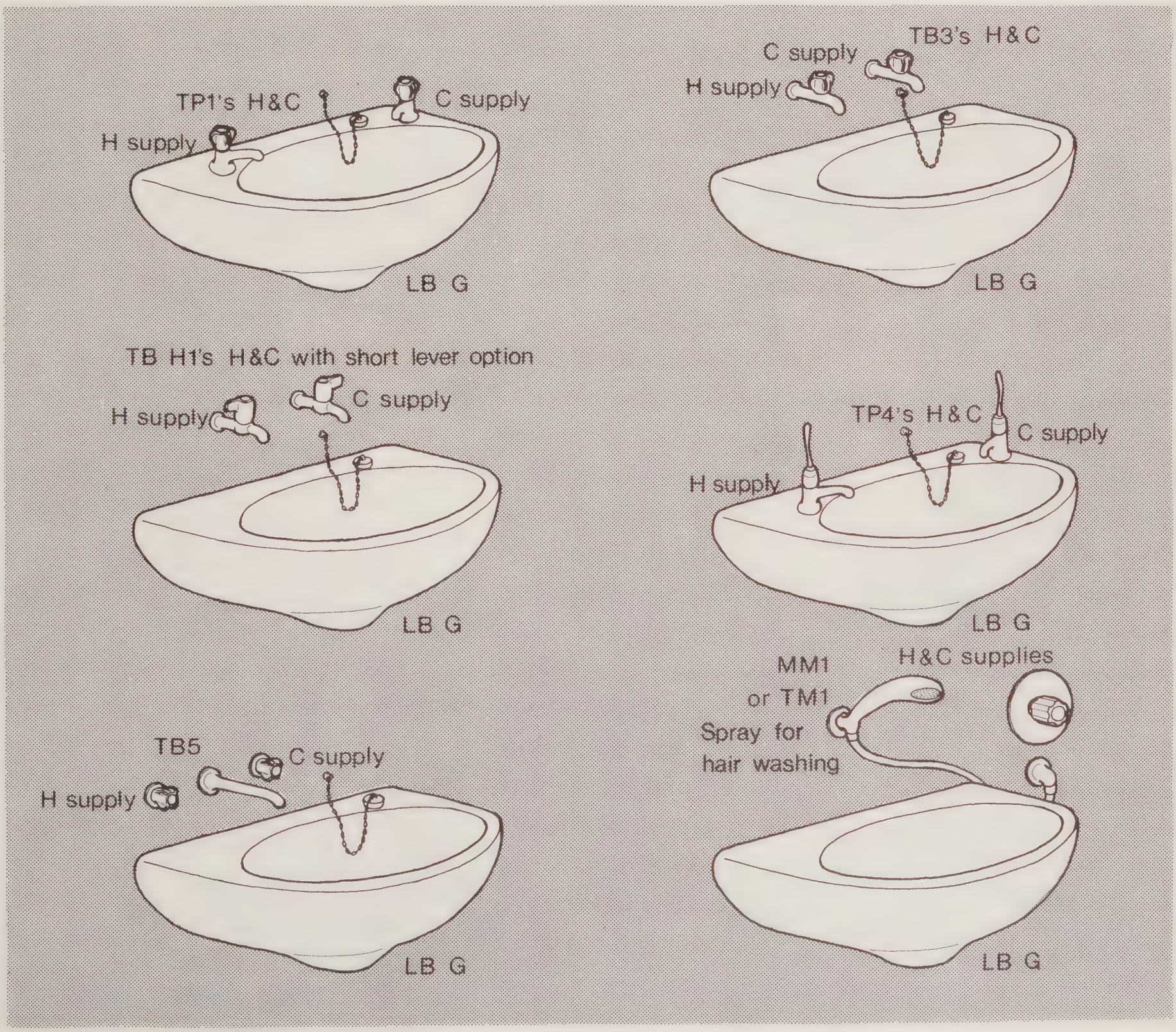

Basin Assemblies for use in connection with personal washing by seated users

The essential requirements are:-

1. Space beneath bowl to accommodate knees
   of a person seated in a wheelchair (seat height 480/550)
   or on a normal chair (seat height 430/450).
   This can be achieved by using -
   a Large Hospital Pattern Basin with trap set in a duct
   or by using a Large Shallow General Basin with short exposed waste bend
   and with trap set in duct.
2. Lever or toggle action taps.

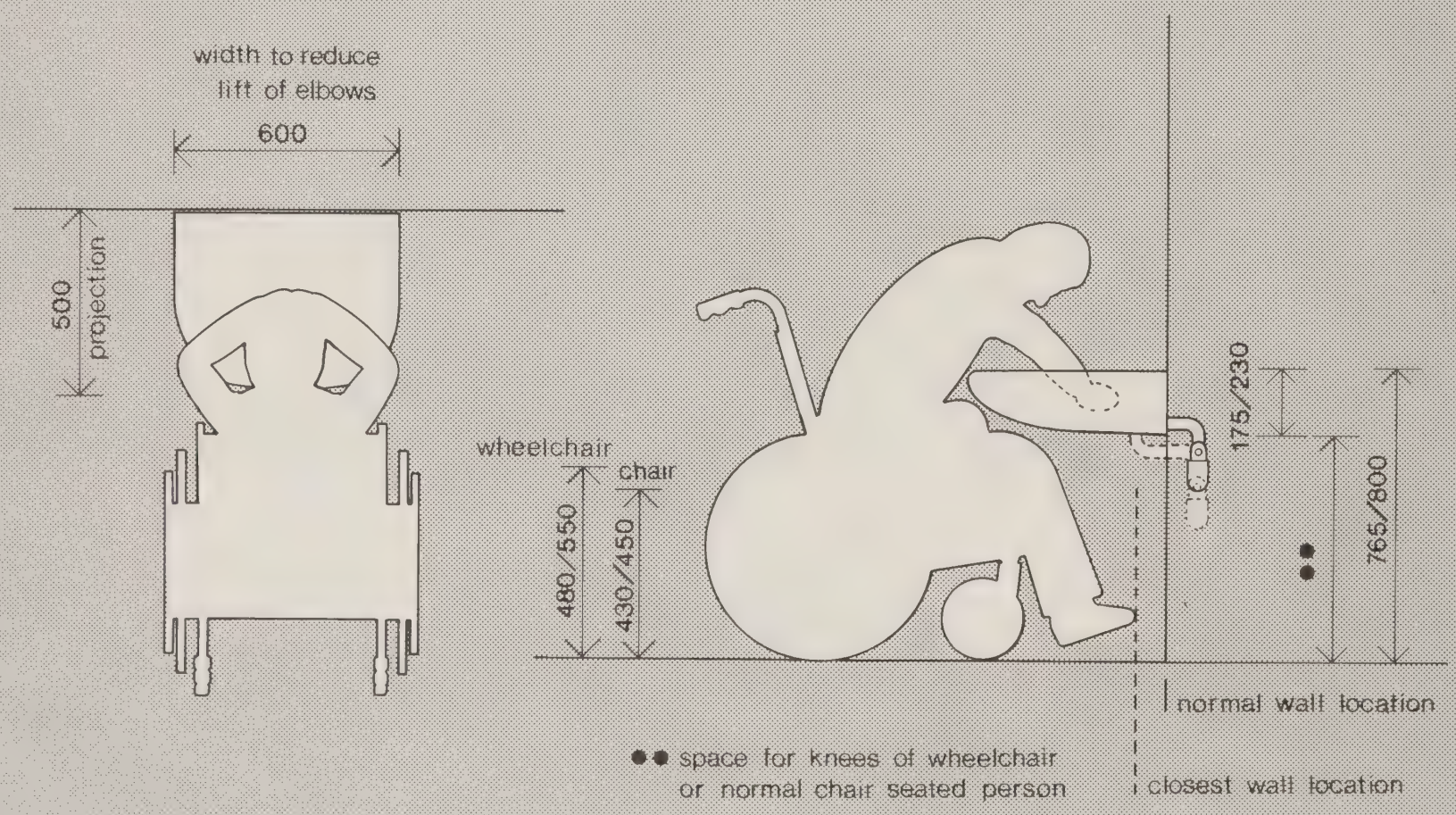

Basin Assemblies for hand rinsing only

The essential requirements are:—

1. General Basin.
2. Washing under running water (therefore no plug).
3. Hand wash only, therefore small or medium basins.
4. Combined manual control of flow and temperature of water.
5. Single flow spout with spray nozzle.
6. Rotating action taps -

   (Note: when intended for use by handicapped users lever action taps may be preferred and basin should be set at special height: see basin assembly sheet for seated users).

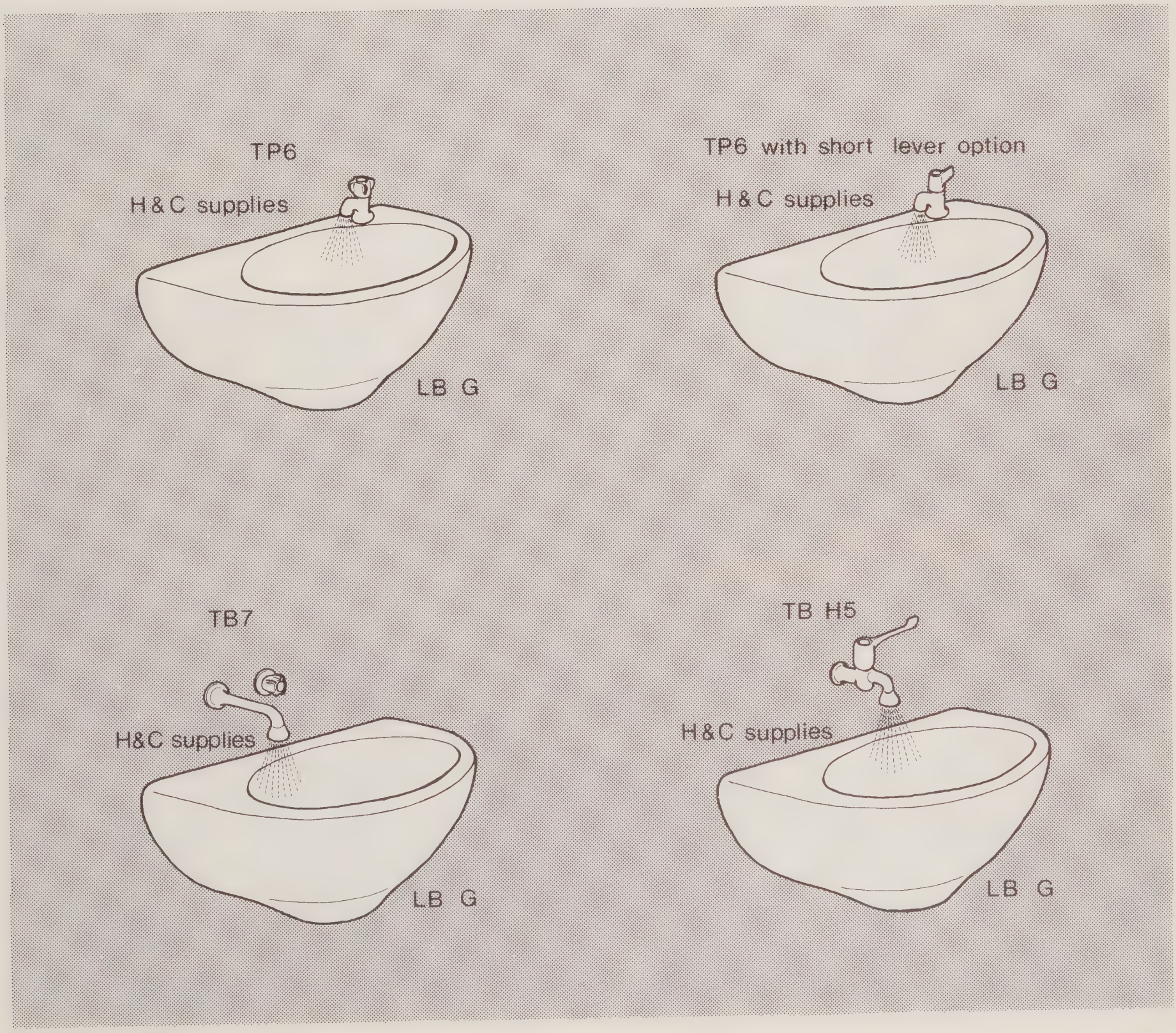

Bath Assembly for use in connection with assisted bathing by nursing staff

The essential requirements are:—

1. Hospital Pattern metal or Plastic Bath.
2. Separate manual control of hot and cold water.
3. Single flow fixed nozzle with flow straightener.
4. Connecting to concealed services.
5. Optional addition – Thermostatic Shower Mixer with flexible hose and handset spray.
6. Side and end panels with recessed plinths to permit use of patient hoist.

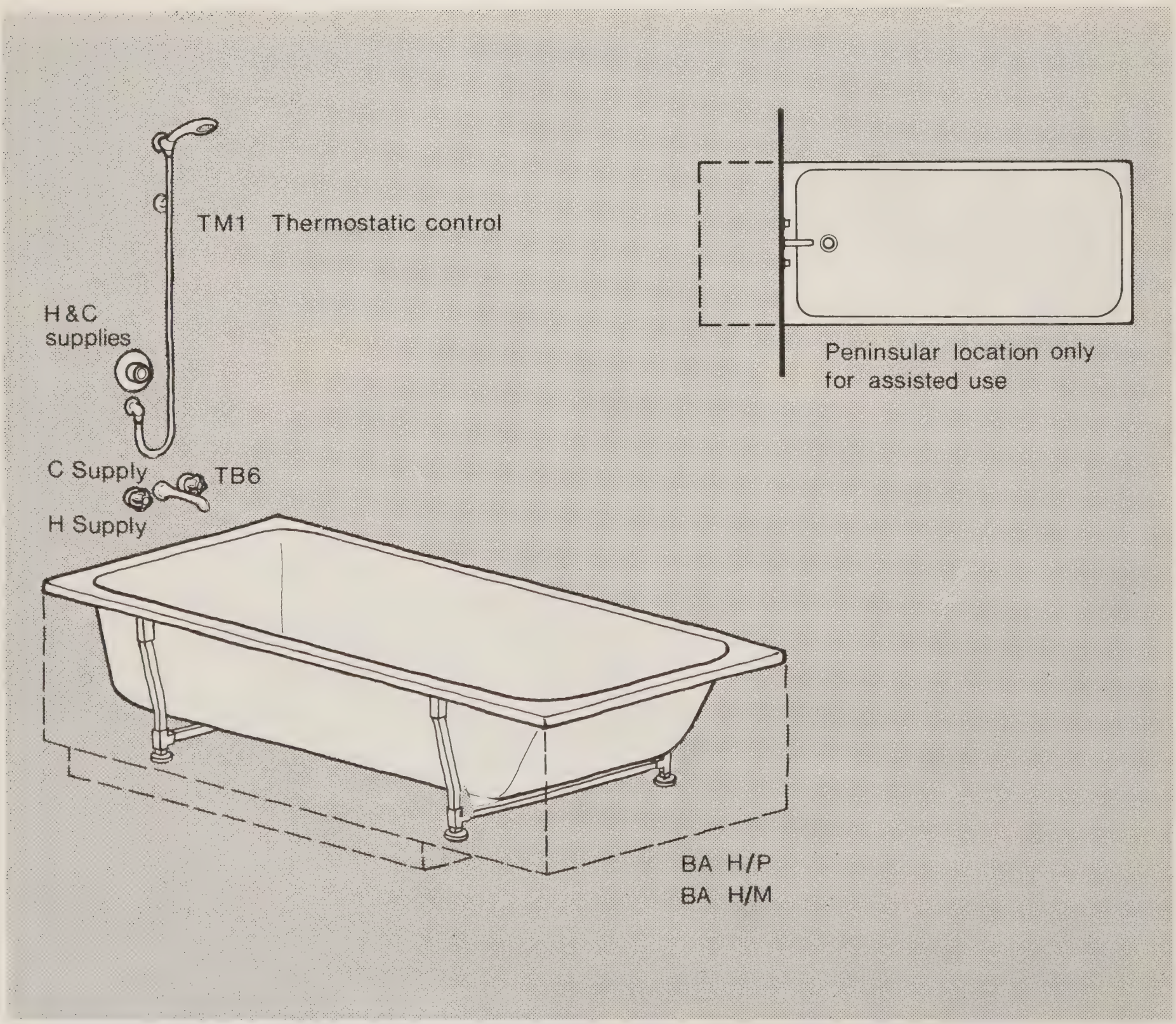

Bath Assemblies for use in connection with personal bathing by patients and/or staff

The essential requirements are:—

1. General Bath.
2. Hospital pattern bath is preferred for clinical areas.
3. Separate manual control of hot and cold water. Wall mounted taps are preferred in clinical areas.
4. Combined or separate nozzle(s) with flow straightener.
5. Optional addition – Shower mixer with fixed nozzle or flexible hose and handset spray.

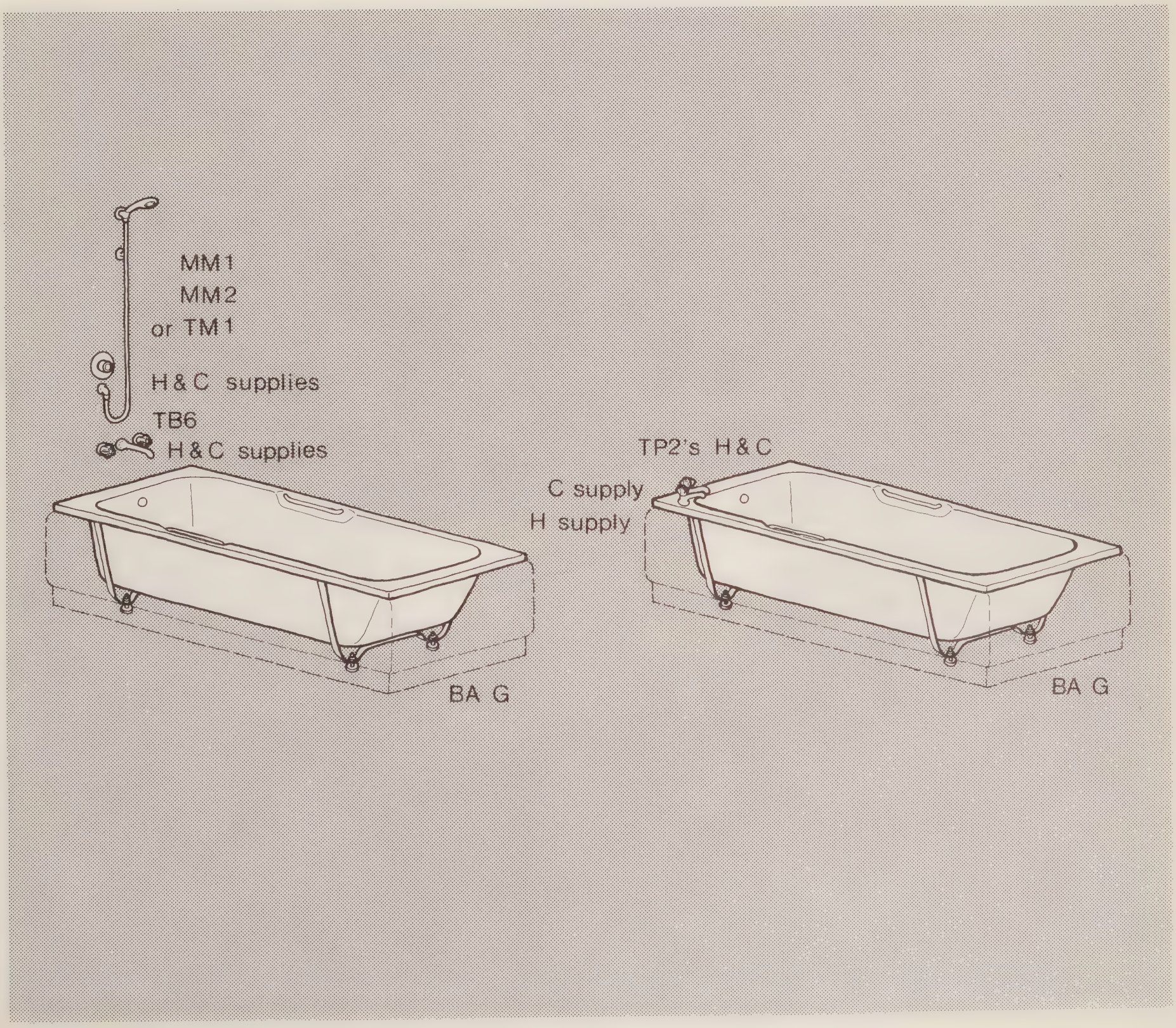

Bidet Assembly for use in connection with medical/nursing procedures

The essential requirements are:—

1. Hospital Pattern Bidet with flush grated waste (therefore no plug).
2. Shower mixer with flexible hose and handset spray.
3. Water temperature thermostatically controlled.
4. Connecting to concealed services.

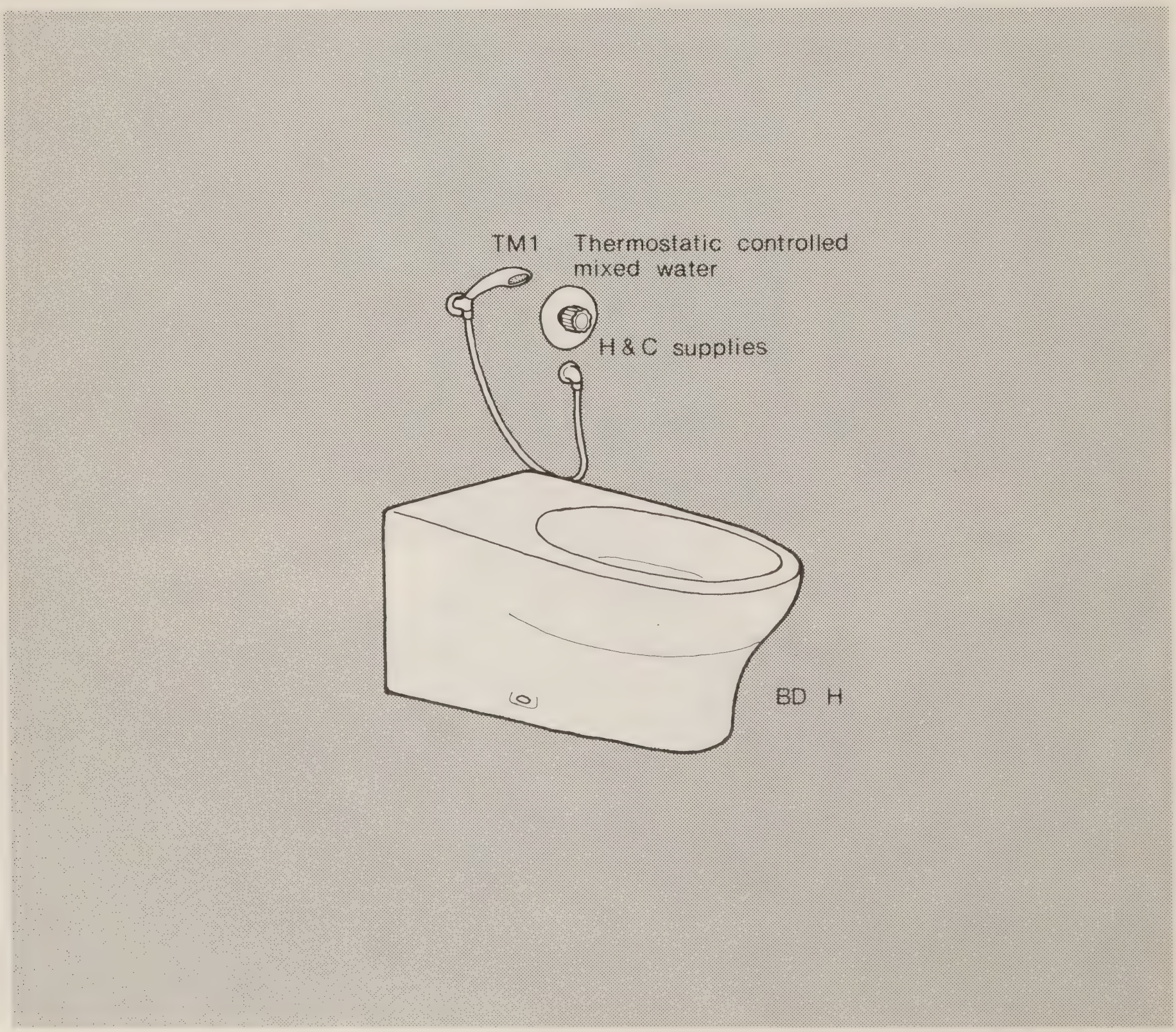

Plaster Sink Assembly for use in connection with plaster preparation

The essential requirements are:—

1. Hospital Pattern Plaster Sink.
2. Hospital Pattern (lever action) taps to avoid contamination.
3. Separate manual control of hot and cold water.
4. Single flow swivel nozzle with flow straightener.
5. Connecting to concealed services.

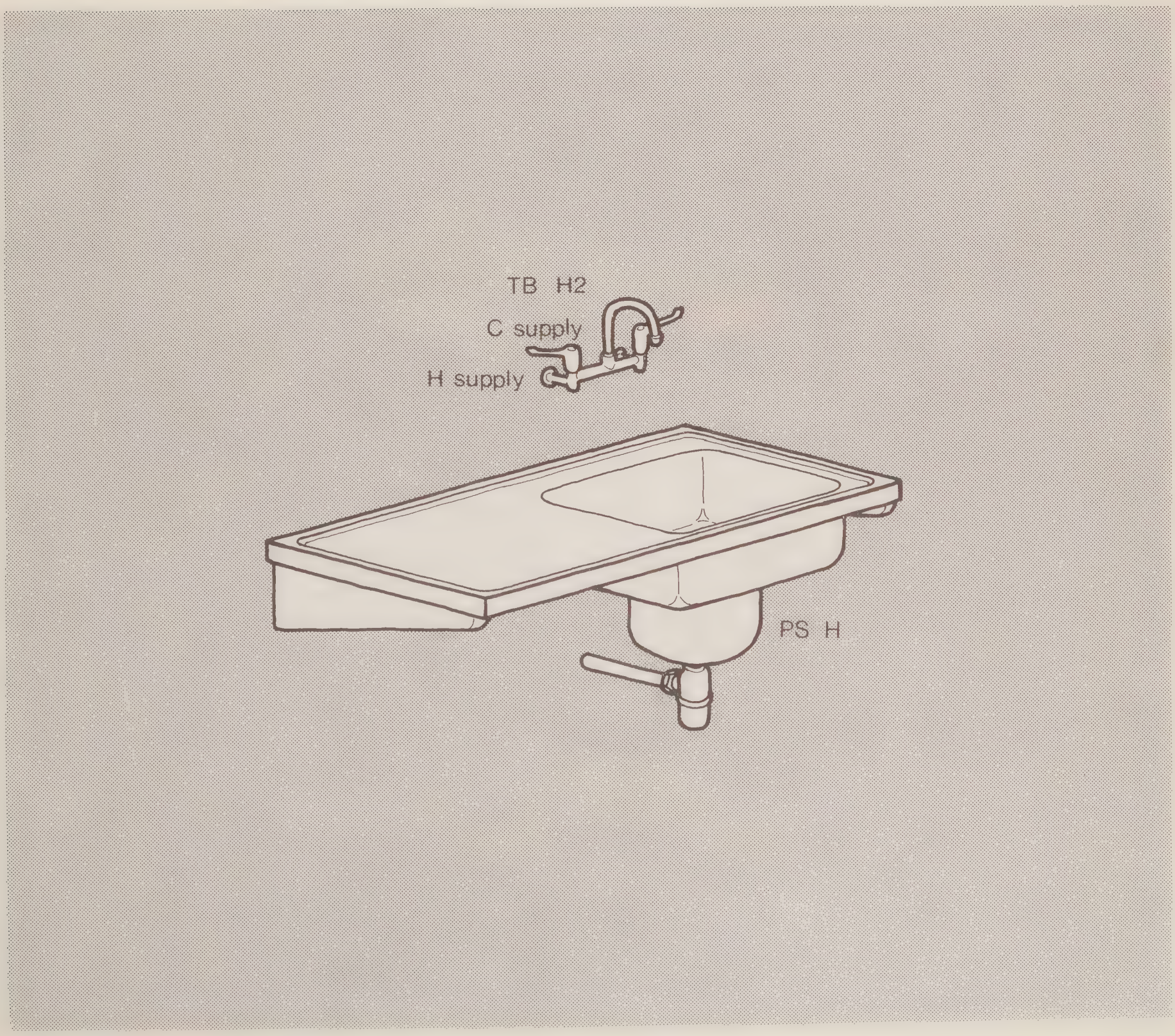

Scrub-up Trough Assemblies for use in connection with Surgical washing of forearms and hands

The essential requirements are:—

1. Hospital Pattern Scrub-up Trough.
2. Washing under running water (therefore no plug).
3. Hospital Pattern (lever action) tap(s).
4. Single flow nozzle (may be spray or flow straightener nozzle).
5. Water temperature may be controlled thermostatically or manually.
6. Connecting to concealed services.

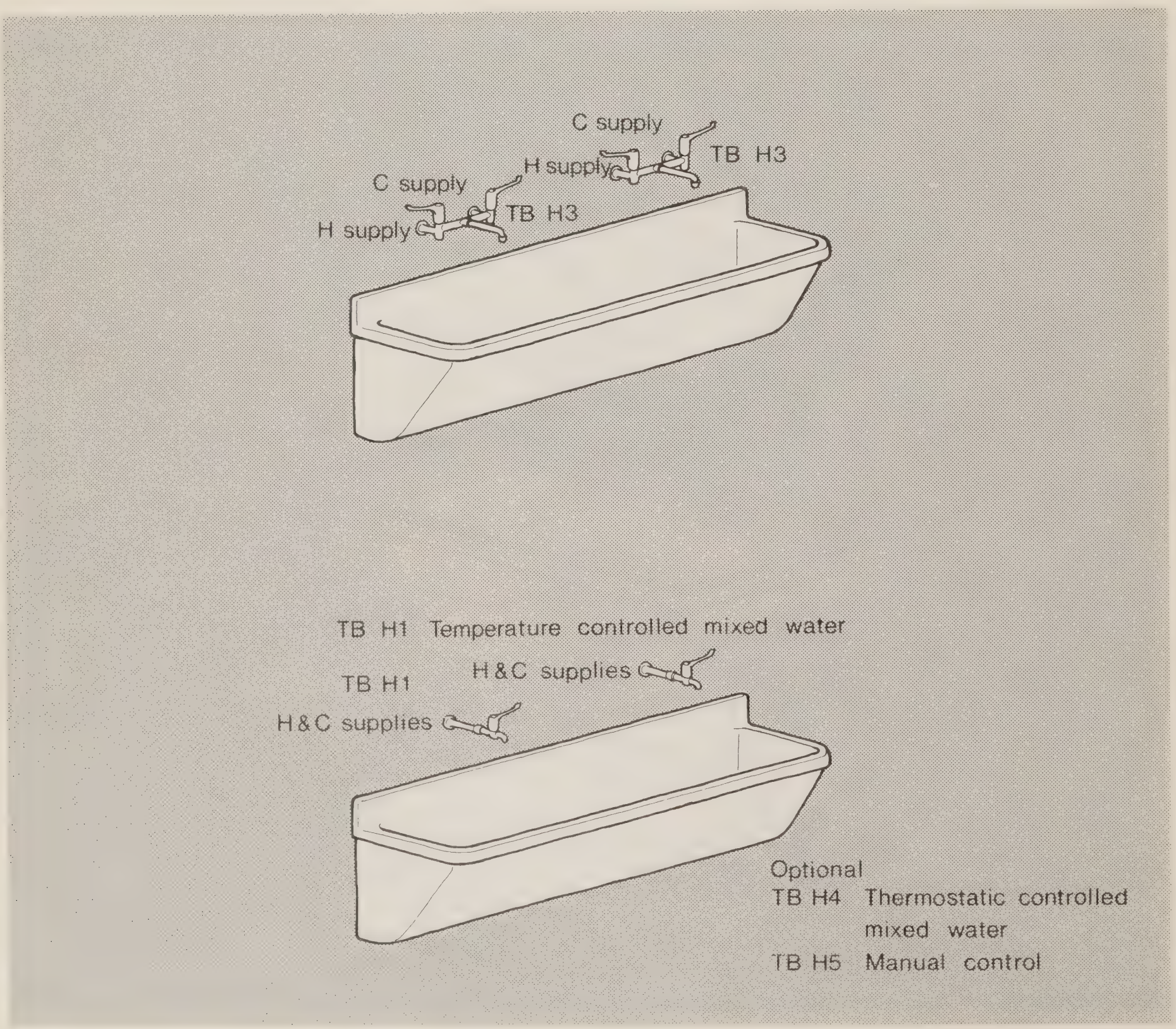

Sink and Sink Top Assemblies for use in connection with nursing procedures

The essential requirements are:—

1. Sink or Sink Tops.
2. Hospital Pattern (lever action) tap(s).
3. Separate manual control of hot and cold water.
4. Combined or separate nozzles with flow straighteners (combined swivel nozzle with single flow preferred).
5. Normally washing under running water (therefore flush grated waste with no plug).

   Where a reservoir of water is required use recessed waste with plug.

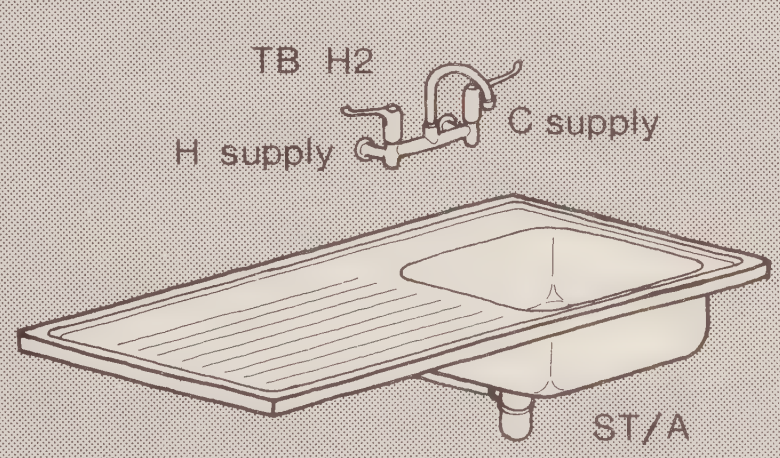

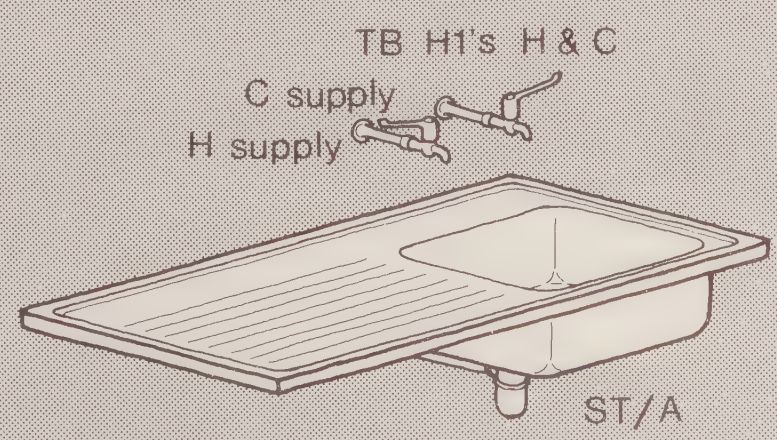

Sink and Sink Top Assemblies for use in connection with domestic services procedures

The essential requirements are:—

1. Sink or Sink Top.
2. Washing in a reservoir of water (therefore a sink with plug).
3. Separate manual control of hot and cold water.
4. Combined or separate nozzle with flow straightener (combined swivel nozzle preferred).
5. Rotating action taps.

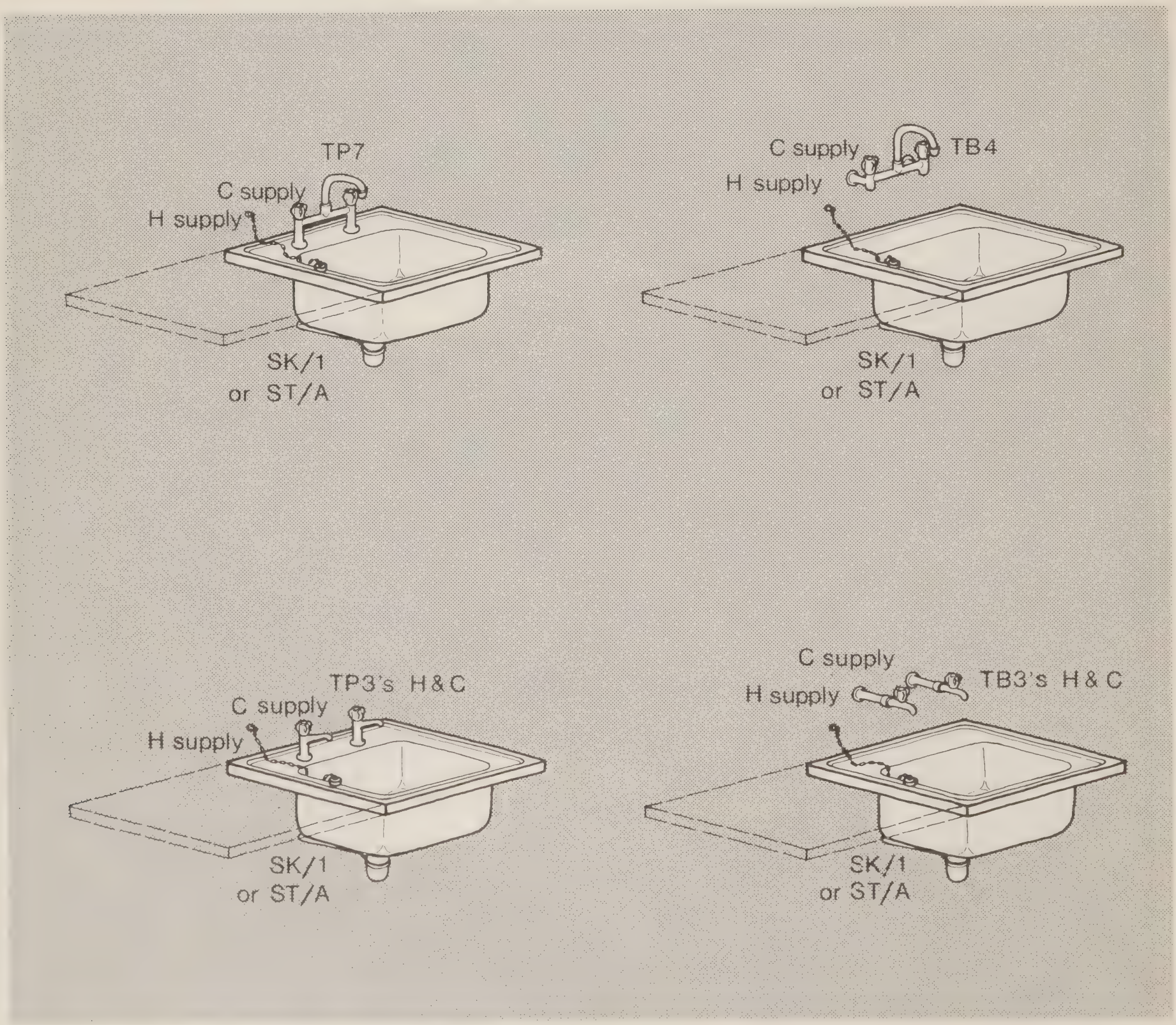

4 Project documentation

4.1 Scheduling

Sanitary assemblies can be described and specified on a schedule prepared by the design team to supplement the information on the layout drawings.

The schedule, together with a list of products and manufacturers product literature, should be used:

- by the quantity surveyor to obtain a detailed specification for each item including the manufacturers name, and trade name and catalogue reference of the product
- by the main contractor for purchasing, sorting and installing on site
- by merchants for preparing their own purchasing and delivery lists.

The schedule and list of products should be completed and issued as appropriate to these functions, using the component references on the data sheets in 3.2 to identify the function and type of each appliance.

4.2 Product data

It is important that site staff should be provided with appropriate product information to enable them to carry out their supervisory role efficiently.

This could take the form of copies of illustrations of selected products taken from the manufacturers/merchants catalogues together with the schedule and list of products.

4.3 Bills of quantities

Having clearly identified the selected products in terms of manufacturers or merchants references on the list of products, and having measured and fully described them in the bills of quantities, it only remains to instruct the main contractor to procure them from named sources or from those of his own choice.

In either case the aim should be to draw upon sources listed in the BSI Buyers Guide, and to control substitution of alternative products.

5 Site practice

5.1 Ordering and storage

Sanitary assemblies are made up of component parts which may originate from several sources. Most vitreous china and glazed fireclay ware made in the UK originates from the West Midlands. Acrylic baths and shower trays, plumbers brassware, taps and fittings are made by a variety of firms some of which are associated companies of the ware manufacturers.

All ware manufacturers market their products exclusively through merchants. Some manufacturers of fittings and steel sinks will market direct to contractors but the most common form of supply is via plumbers merchants. A merchant may arrange to buy in components from several manufacturers and to assemble those components on his own premises.

Components should always be selected from manufacturers' or merchants' product ranges. The ordering of specials may involve delivery periods of several months and replacements may be difficult to obtain and expensive.

The main contractor should provide secure and weathertight storage and control.

5.2 Fixing and protection

All appliances must accept live loadings in use. This depends on the strength of the appliance, its fixing devices and the construction to which it is fixed. A load of 140 kg should be sustained by the assembly.

Back panels or spreader devices should be used when fixing basins, sinks or urinals to plasterboard or soft-plastered partitions. This is to ensure a firm fixing free from indentation from brackets or fixing plates.

The use of wall mounted supply fittings should facilitate site installation of appliances and allow flexibility in programming.

Where appliances are mounted on flat surfaces of floors or walls a waterproof seal must be made at contact points.

Appliances and fittings should be delivered to site suitably protected and care must be taken to ensure that this is not removed prematurely. Further protection may be required to avoid marking of and damage to appliances before and after installation.

5.3 Preparation for handover

Arrangements should be made for the removal of all protective material at the latest possible stage prior to handover.

All assemblies, appliances and fittings should be tested for leaks, cleaned, inspected for damage and damaged parts replaced and left in perfect operating order before handover.

Manufacturers fixing and maintenance instructions should be included in a maintenance manual or passed to the maintenance staff. A clause to this effect should be included in the contract documentation.

References

Other HMSO publications

Health Technical Memoranda:
27 Cold water supply: storage and mains distribution
56 Partitions
62 Demountable storage system
63 Fitted storage system

Other DoH data

Activity data base
Health Notice (80)39 - Legionnaires disease and hospital water systems
Building Note: Common Activity Spaces No. 40 and other Health Building Notes
Nucleus hospitals.

Statutory legislation

Model Water Byelaws
Byelaws of the Statutory Water Undertakers
Report by the Committee on Backsiphonage in Water Installations, 'The Bacteriological Examination of Water Supplies'.

National Building Specification

Section 531: Water supply pipework
Section 721: Sanitary appliances

British Standard Specifications and Codes of Practice

BS 729	Hot dip galvanised coatings on iron and steel articles
BS 1010 Part 2	Draw off taps and stopvalves (screwdown pattern)
BS 1125	WC flushing cisterns
BS 1184	Copper and copper alloy traps
BS 1188	Ceramic wash basins and pedestals
BS 1189	Cast iron baths
BS 1206	Fireclay sinks
BS 1212 Part 2	Float operated valves (diaphragm type: brass body)
BS 1244 Part 2	Stainless steel sink tops
BS 1254	WC seats (plastics)
BS 1344	Methods of testing vitreous enamel finishes
BS 1390	Sheet steel baths for domestic purposes
BS 1415 Part 1	Non-thermostatic, non-compensating mixing valves
Part 2	Thermostatic mixing valves
BS 1449 Part 2	Stainless steel plate
BS 1876	Automatic flushing cisterns for urinals
BS 2456	Floats (plastics) for ballvalves for hot and cold water
BS 2871 Part 1	Copper tubes for water, gas and sanitation
BS 3380	Wastes and bath overflows
BS 3402	Quality of vitreous china sanitary appliances
BS 3468	Austenitic cast iron
BS 3605	Seamless and welded austenitic stainless steel pipes and tubes for pressure purposes
BS 3943	Plastic waste traps
BS 4118	Glossary of sanitation terms
BS 4305	Cast acrylic baths for domestic purposes
BS 4514	Unplasticized PVC soil and ventilating pipe, fittings and accessories
BS 4751	Sanitary wheelchairs
BS 5412	Performance of draw-off taps for water services
BS 5503	Vitreous china washdown WC pans with horizontal outlet
BS 5505 Part 1	Pedestal bidets
BS 5520	Vitreous china bowl urinals
BS 5572	Code of Practice for sanitary pipework
BS 5627	Plastics connectors for use with horizontal outlet vitreous china WC pans
BS 6340 Part 1	Guide on choice of shower units
Part 2	Specification for installation of shower units
Part 4	Shower heads
Part 5	Shower trays in acrylic material
Part 8	Shower trays in glazed ceramic material
BS 6465 Part 1	Code of practice for scale of provision, selection and installation of sanitary appliances

BSI Buyers Guide

Index of Guidance Amendment No IGAN 13 (for internal use)
The following documents are cencelled by the contents of this document:–
CDB10 : MDB 4/1

Other publications
Water Research Council – Materials and fittings directory.

Printed in the United Kingdom for Her Majesty's Stationery Office
Dd290394 8/89 C50 G3390 10170

HMSO publications are available from:

HMSO Publications Centre
(Mail and telephone orders only)
PO Box 276, London, SW8 5DT
Telephone orders 01-873 9090
General enquiries 01-873 0011
(queuing system in operation for both numbers)

HMSO Bookshops
49 High Holborn, London, WC1V 6HB 01-873 0011 (Counter service only)
258 Broad Street, Birmingham, B1 2HE 021-643 3740
Southey House, 33 Wine Street, Bristol, BS1 2BQ (0272) 264306
9-21 Princess Street, Manchester, M60 8AS 061-834 7201
80 Chichester Street, Belfast, BT1 4JY (0232) 238451
71 Lothian Road, Edinburgh, EH3 9AZ 031-228 4181

HMSO's Accredited Agents
(see Yellow Pages)

and through good booksellers

£5.80 net

ISBN 0 11 321243 7